wiring diagram:

Self-propelled trolley
Series: SGAE VC P 50/2

MORELLO GIOVANNI S.R.L.

MATERIAL HANDLING TECHNOLOGY SINCE 1946

customer: GENERAL ELECTRIC APPLIANCE

n. order: 2555C4

specifications: USA

Certification:	UL
Feeding:	80V
Control voltage:	24V
Operating Temperature:	0°C...+40°C
Degree of protection:	min. IP55
Scope:	50t
Axles and wheels:	2 axles / 2 axle steering / 2 wheel drive 2 idler wheels
Securities:	4 x red mushroom emergency stop buttons 2 yellow flashers and 1 beeper 1 Clacson 2 steering sensors 1 steering encoder 2 blue-spot 2 laser scanner 2 negative brakes in traction motors

REV.	MODIFICA	DATA	FIRMA
03	AS_BUILT AND TRANSLATION	08/07/26	R.G.
02		20/05/26	
01		28/04/26	

COMMESSA M2555C4

GENERAL ELECTRIC APPLIANCE

MORELLO GIOVANNI S.R.L.

DATA 28/04/2026
DOC.Nr. M2555C4_1
FILE M2555C4_REV3_ENG
DISEGN. R.G.
APPR.

DOCUMENTO SGAE VC P 50/2

COPERTINA
cover

SCALA

Fogli Totali 51

Foglio 1

Foglio Seguente 1A

STANDARD

CE STANDARD

Conductor color

Black (BK) :	Main current circuits for direct and alternating voltage
Light Blue (LBU):	Neutral conductor for alternating voltage
Red (RD) :	AC voltage control circuits
Blue (bu):	Control circuits for DC voltage
Orange (OG) :	External ring/voltage wires before main switch
green-yellow (gnye):	Protective conductor

Leading cross-section

All conductors not marked for 24V DC: 0.5 mm^2 / blue

Color

Black:	(BK)
brown:	(BN)
Red:	(RD)
Orange:	(OG)
Yellow:	(YE)
Green:	(GN)
Blue:	(BU)
light blue:	(LBU)
purple:	(VT)
Grey:	(GY)
White:	(WH)
Pink:	(PK)
Gold:	(GD)
Turquoise:	(TQ)
Silver:	(SR)
light blue:	(PB)
Transparency:	(TR)
Green/Yellow:	(GN/YE)
Screen:	(SH)

UL/CSA STANDARD

Conductor color

Black (BK) :	Main current circuits for direct and alternating voltage operating at the supply voltage
Red (RD) :	control system for ungrounded sieved current operating at a voltage lower than the supply voltage
White (wh):	grounded flood current control circuit, regardless of voltage
Blue (bu):	Control circuits protected for DC voltage
White/Blue (Wh/Bu):	Common grounded DC current
Orange (OG) :	Ungrounded AC or DC power cords that remain energized when the main disconnector is turned off
White/Orange (Wh/Og):	grounded AC or DC power wires that provide power when the main disconnector is disconnected
Green/Yellow (GN/YE):	Protective conductor

Leading cross-section

All conductors not marked for 24V DC: 20AWG

REV.	MODIFICA	DATA	FIRMA
02		20/05/26	

COMMESSA M2555C4

GENERAL ELECTRIC APPLIANCE

MORELLO GIOVANNI S.R.L.

DATA 28/04/2026
DOC.Nr. M2555C4_1
FILE M2555C4_REV3_ENG
DISEGN. R.G.
APPR.

DOCUMENTO SGAE VC P 50/2

NORMATIVE COLORAZIONI CONDUTTORI

Guide Staining Regulations

SCALA

Fogli Totali 51

Foglio 1A

Foglio Seguente 1B

N.	Fg/Sh	Modifica/Modify	Data/Date	Firma/Signature
01	1		28/04/26	
	2		28/04/26	
	4		28/04/26	
	5		28/04/26	
	6		28/04/26	
	9		28/04/26	
	10		28/04/26	
	34		28/04/26	
	38		28/04/26	
	39		28/04/26	
	40		28/04/26	
	41		28/04/26	
	43		28/04/26	
	44		28/04/26	
	45		28/04/26	
	46		28/04/26	
	47		28/04/26	
	48		28/04/26	
	49		28/04/26	
	50		28/04/26	
	51		28/04/26	
02	1		20/05/26	
	1A		20/05/26	
	1B		20/05/26	
	2		20/05/26	
03	1	AS_BUILT AND TRANSLATION	08/07/26	R.G.
	9	ADDED DOOR SENSOR	08/07/26	R.G.
	27	CHANGED LASER SCANNER	08/07/26	R.G.

BOARD	*DESCRIPTION*
BM	*MACHINE BORD*
CG	*charger*
EP1	*Overview*
PB1	*Corded push-button panel*

REV.	MODIFICA	DATA	FIRMA
02		20/05/26	

COMMESSA M2555C4

GENERAL ELECTRIC APPLIANCE

MORELLO GIOVANNI S.R.L.

DATA 28/04/2026
DOC.Nr. M2555C4_1
FILE M2555C4_REV3_ENG
DISEGN. R.G.
APPR.

DOCUMENTO SGAE VC P 50/2

REVISIONI
Revisions

SCALA

Fogli Totali 51

Foglio 1B

Foglio Seguente 2

LISTA FOGLI \ INDEX

Foglio Sheet	Descrizione Description	Revisioni Revisions 1	2	3	4	5	6	7	8	9
1	*title*	X	X							
1A	*Guide Staining Regulations*		X							
1B	*Revisions*		X							
2	*index*	X	X							
4	*battery*	X								
5	*Left Traction Motor Controller*	X								
6	*Right Traction Motor Controller*	X								
9	*General Nutrition*	X								
10	*AUXILIARY CIRCUIT POWER SUPPLY*	X								
11	*Cart Reports*									
12	*Control panels*									
14	*BM Emergencies and Reset*									
15	*RFID Keypad Bypass Scanner*									
16	*emergency*		X							
17	*emergency*									
18	*emergency*									
19	*PLC Power Supply and Canbus*									
20	PLC INPUT									
21	PLC INPUT									
23	PLC OUTPUT									
24	PLC OUTPUT									
27	*Laser Scanner*									
31	CAN BUS									
33	*Legend Terminal Connection Points*									
34	*Panel terminal block EP1*	X								
35	*Junction box terminal blocks*									
36	*Connectors*									
38	*Quadro EP1 front panel layout*	X								

Foglio Sheet	Descrizione Description	Revisioni Revisions 1	2	3	4	5	6	7	8	9
39	*EP1 Panel Layout*	X								
40	*EP1 Panel Layout*	X								
41	*EP1 Panel Layout*	X								
43	*Bill of Materials*	X								
44	*Bill of Materials*	X								
45	*Bill of Materials*	X								
46	*Bill of Materials*	X								
47	*Bill of Materials*	X								
48	*Bill of Materials*	X								
49	*Bill of Materials*	X								
50	*Bill of Materials*	X								
51	*Bill of Materials*	X								

REV.	MODIFICA	DATA	FIRMA
02		20/05/26	
01		28/04/26	

COMMESSA M2555C4

GENERAL ELECTRIC APPLIANCE

MORELLO GIOVANNI S.R.L.

DATA 28/04/2026
DOC.Nr. M2555C4_1
FILE M2555C4_REV3_ENG
DISEGN. R.G.
APPR.

DOCUMENTO SGAE VC P 50/2

INDICE
index

SCALA

Fogli Totali 51

Foglio 2

Foglio Seguente 4

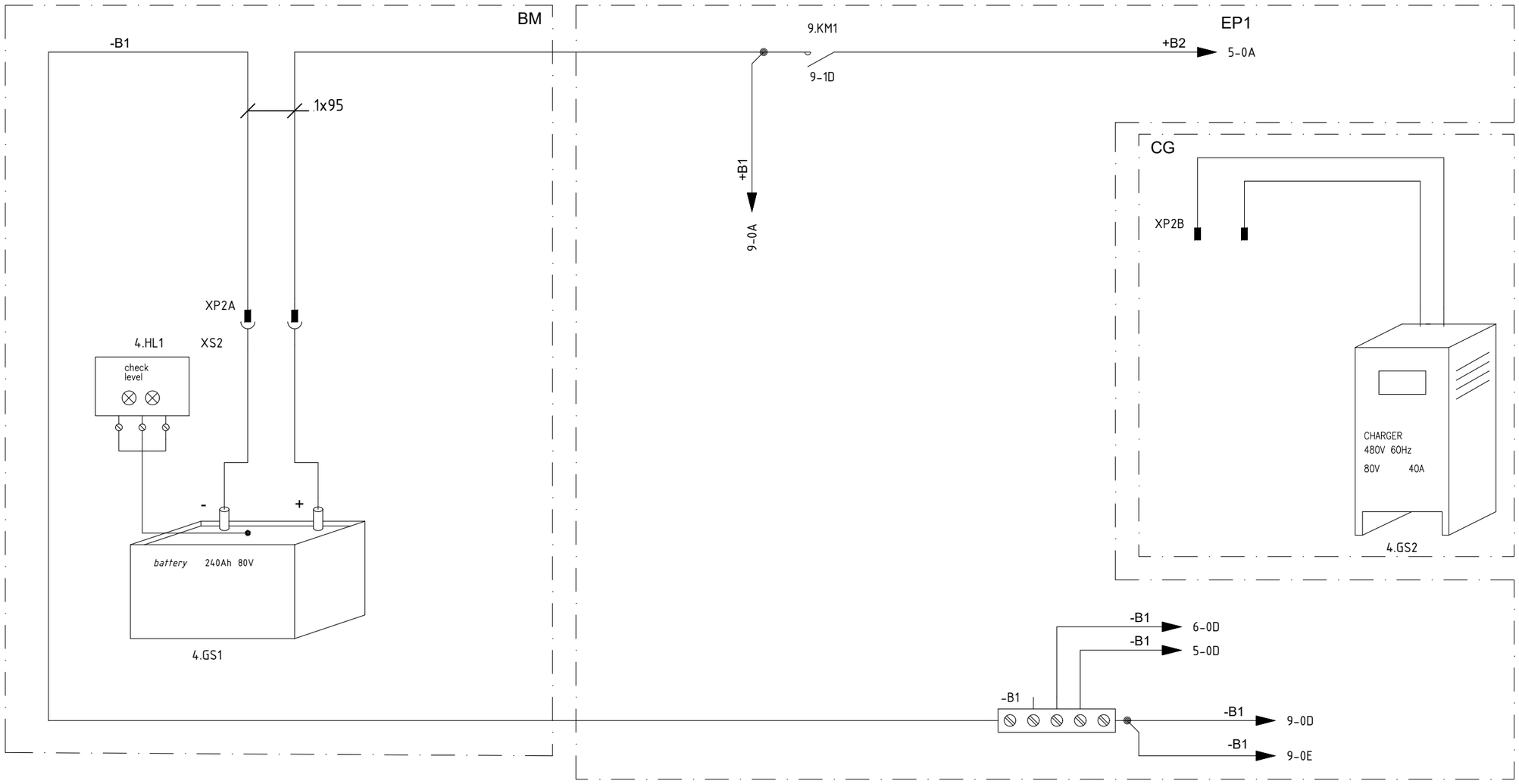

01		28/04/26	
REV.	MODIFICA	DATA	FIRMA

COMMESSA M2555C4

GENERAL ELECTRIC APPLIANCE

MORELLO

MORELLO GIOVANNI S.R.L.

DATA 28/04/2026

DOC.Nr. M2555C4_1

FILE M2555C4_REV3_ENG

DISEGN. R.G.

APPR.

DOCUMENTO SGAE VC P 50/2

BATTERIA

battery

SCALA

Fogli Totali 51

Foglio 4

Foglio Seguente 5

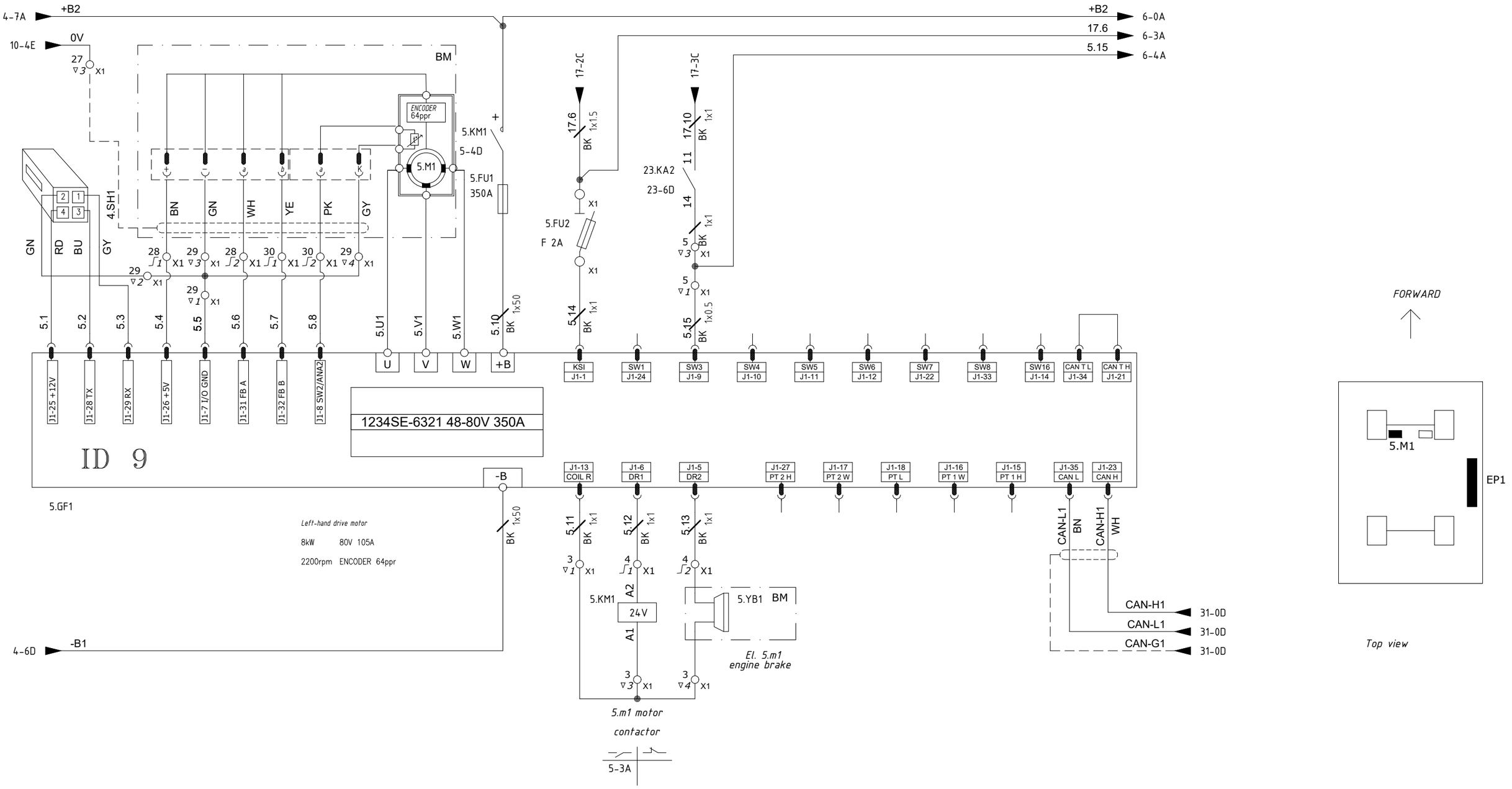

01		28/04/26	
REV.	MODIFICA	DATA	FIRMA

COMMESSA M2555C4

GENERAL ELECTRIC APPLIANCE

MORELLO
MORELLO GIOVANNI S.R.L.

DATA 28/04/2026
DOC.Nr. M2555C4_1
FILE M2555C4_REV3_ENG
DISEGN. R.G.
APPR.

DOCUMENTO SGAE VC P 50/2

CONTROLLORE MOTORE TRAZIONE SINISTRO

Left Traction Motor Controller

SCALA

Fogli Totali 51

Foglio 5

Foglio Seguente 6

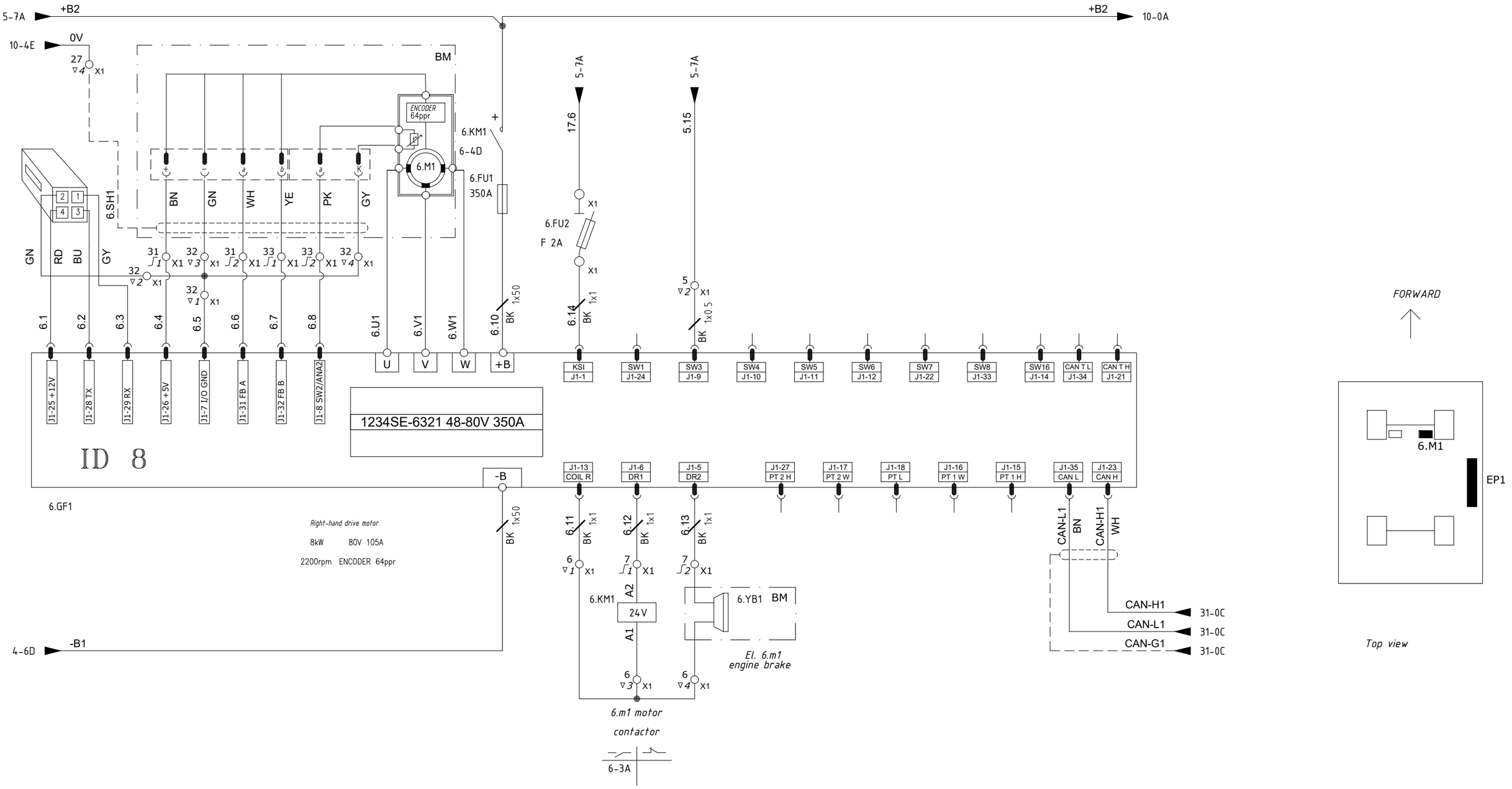

01		28/04/26	
REV.	MODIFICA	DATA	FIRMA

COMMESSA M2555C4

GENERAL ELECTRIC APPLIANCE

MORELLO GIOVANNI S.R.L.

DATA 28/04/2026
DOC.Nr. M2555C4_1
FILE M2555C4_REV3_ENG
DISEGN. R.G.
APPR.

DOCUMENTO SGAE VC P 50/2

CONTROLLORE MOTORE TRAZIONE DESTRO

Right Traction Motor Controller

SCALA

Fogli Totali 51

Foglio 6

Foglio Seguente 9

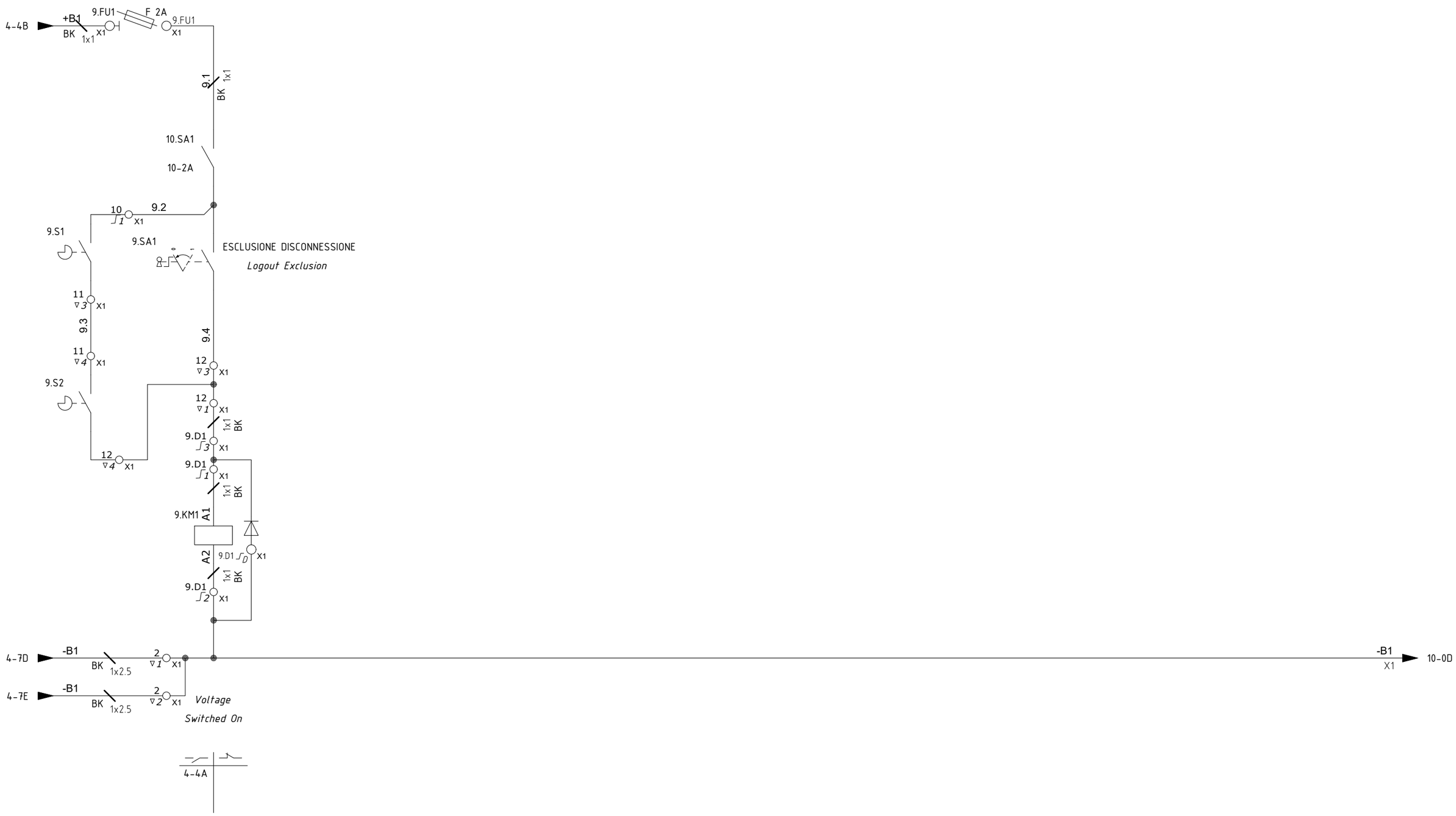

03	ADDED DOOR SENSOR	08/07/26	R.G.
01		28/04/26	
REV.	MODIFICA	DATA	FIRMA

COMMESSA M2555C4

GENERAL ELECTRIC APPLIANCE

MORELLO GIOVANNI S.R.L.

DATA 28/04/2026
DOC.Nr. M2555C4_1
FILE M2555C4_REV3_ENG
DISEGN. R.G.
APPR.

DOCUMENTO SGAE VC P 50/2

ALIMENTAZIONE GENERALE

General Nutrition

SCALA

Fogli Totali 51

Foglio 9

Foglio Seguente 10

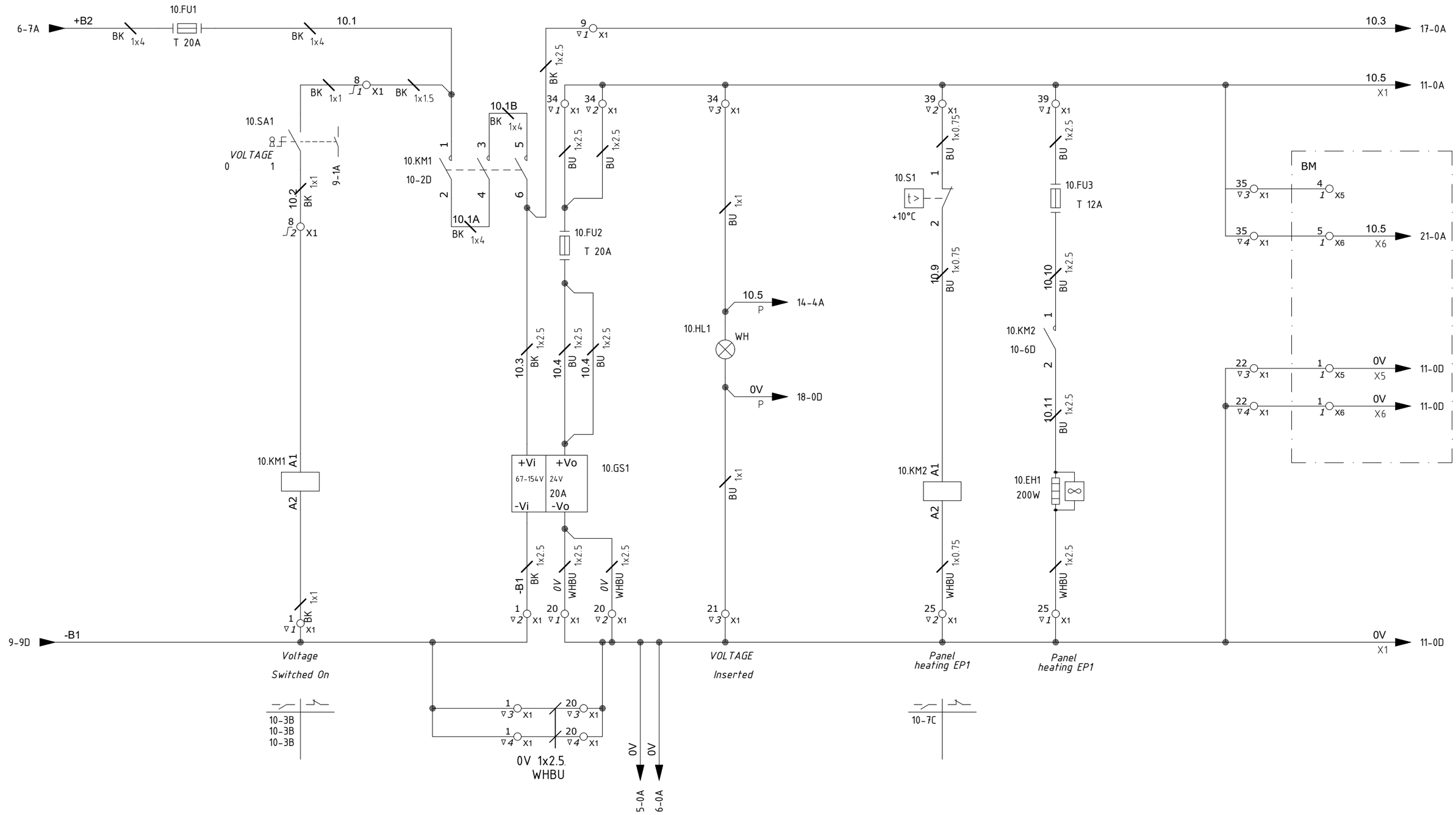

				COMMESSA M2555C4	DATA 28/04/2026	DOCUMENTO SGAE VC P 50/2	SCALA
					DOC.Nr. M2555C4_1		Fogli Totali 51
01		28/04/26		GENERAL ELECTRIC APPLIANCE	FILE M2555C4_REV3_ENG	ALIMENTAZIONE AUSILIARI	
REV.	MODIFICA	DATA	FIRMA	MORELLO GIOVANNI S.R.L.	DISEGN. R.G.	*AUXILIARY CIRCUIT POWER SUPPLY*	Foglio 10 / Foglio Seguente 11
					APPR.		

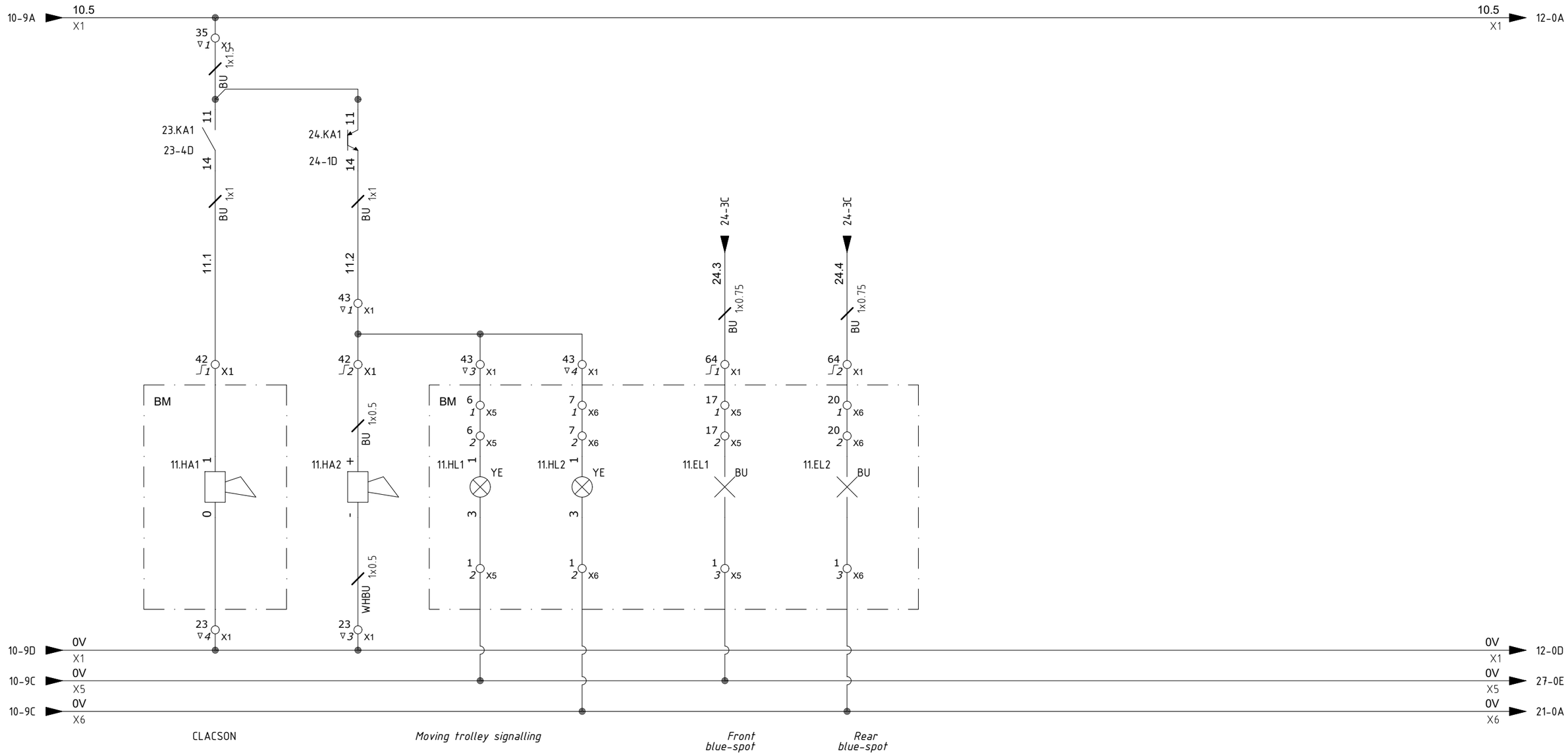

REV.	MODIFICA	DATA	FIRMA

COMMESSA M2555C4

GENERAL ELECTRIC APPLIANCE

MORELLO
MORELLO GIOVANNI S.R.L.

DATA 28/04/2026
DOC.Nr. M2555C4_1
FILE M2555C4_REV3_ENG
DISEGN. R.G.
APPR.

DOCUMENTO SGAE VC P 50/2

SEGNALAZIONI CARRELLO
Cart Reports

SCALA

Fogli Totali 51

Foglio 11

Foglio Seguente 12

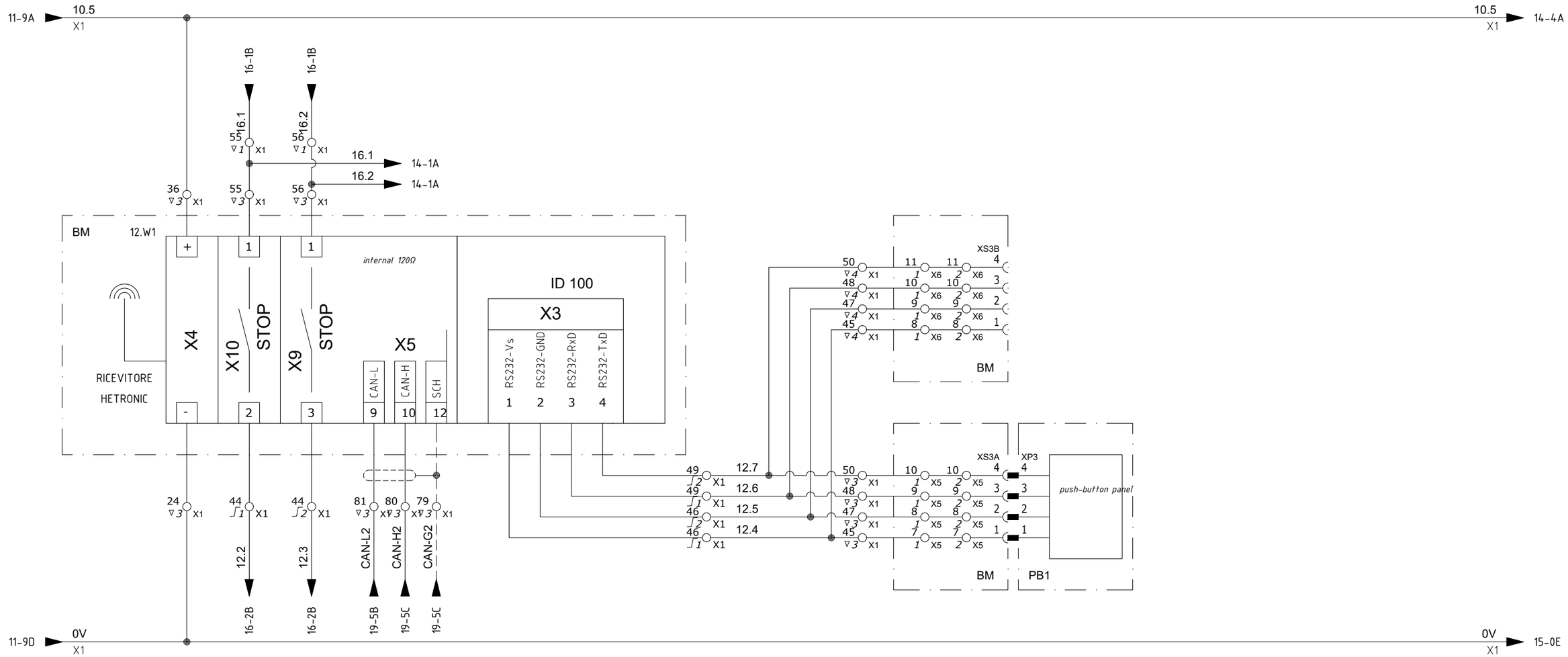

				COMMESSA M2555C4	DATA 28/04/2026	DOCUMENTO SGAE VC P 50/2	SCALA	
					DOC.Nr. M2555C4_1			Fogli Totali 51
				GENERAL ELECTRIC APPLIANCE	FILE M2555C4_REV3_ENG	PULSANTIERE DI COMANDO		
				MORELLO GIOVANNI S.R.L.	DISEGN. R.G.	*Control panels*	Foglio 12	Foglio Seguente 14
REV.	MODIFICA	DATA	FIRMA		APPR.			

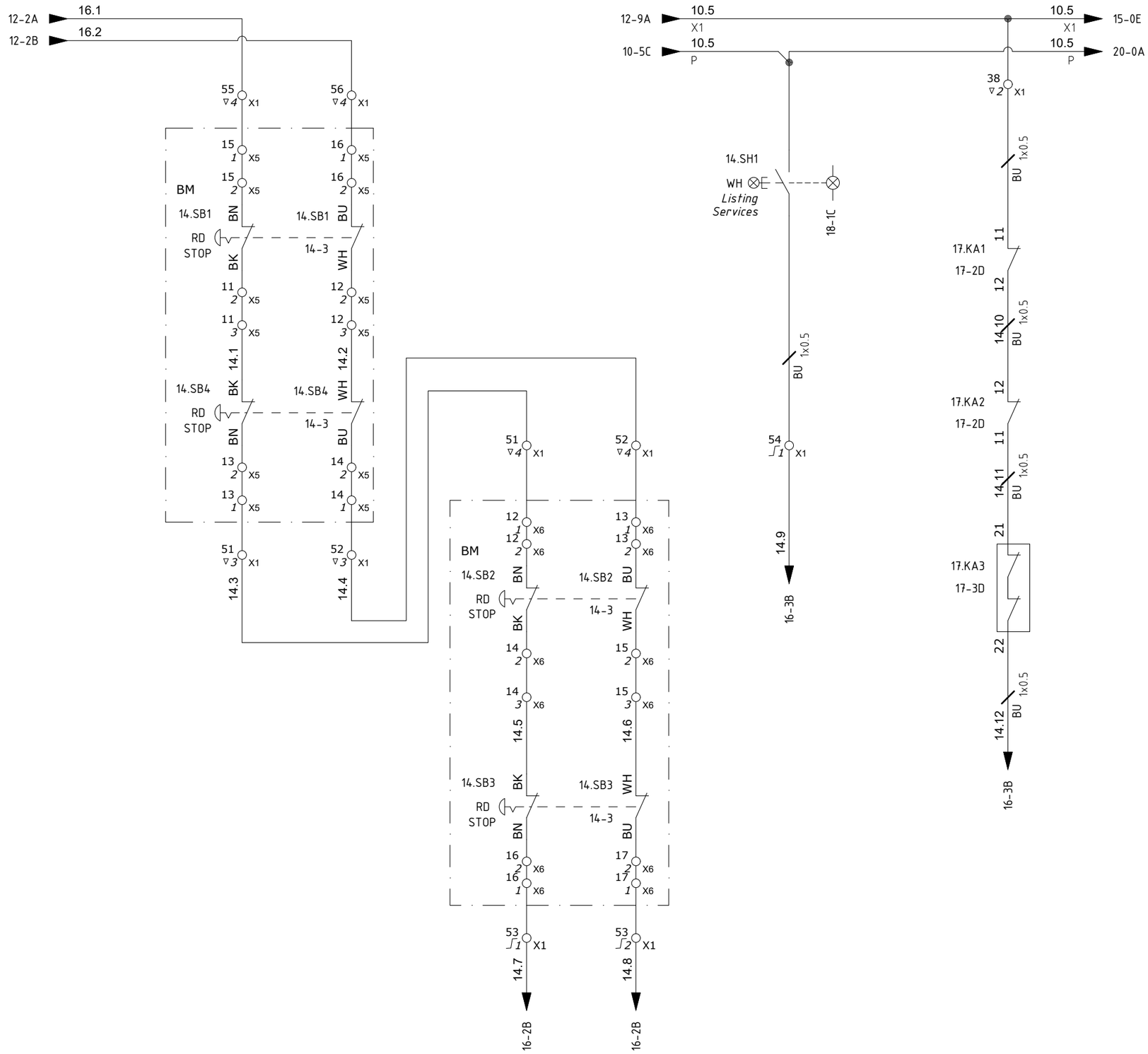

				COMMESSA M2555C4	DATA 28/04/2026	DOCUMENTO SGAE VC P 50/2	SCALA
					DOC.Nr. M2555C4_1		Fogli Totali 51
				GENERAL ELECTRIC APPLIANCE	FILE M2555C4_REV3_ENG	EMERGENZE BM E RESET	
				MORELLO GIOVANNI S.R.L.	DISEGN. R.G.	*BM Emergencies and Reset*	Foglio 14 / Foglio Seguente 15
REV.	MODIFICA	DATA	FIRMA		APPR.		

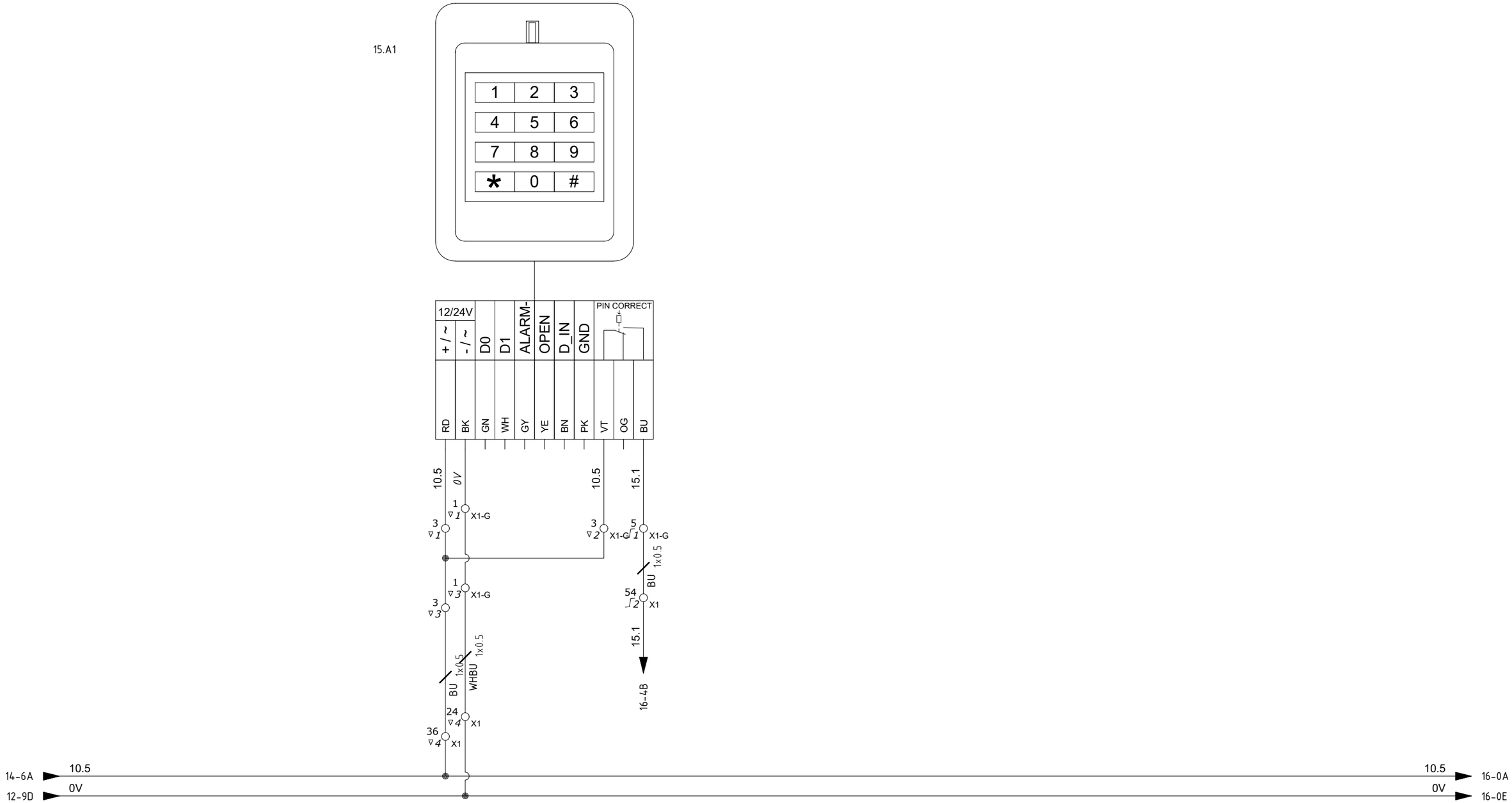

REV.	MODIFICA	DATA	FIRMA

COMMESSA M2555C4

GENERAL ELECTRIC APPLIANCE

MORELLO GIOVANNI S.R.L.

DATA 28/04/2026
DOC.Nr. M2555C4_1
FILE M2555C4_REV3_ENG
DISEGN. R.G.
APPR.

DOCUMENTO SGAE VC P 50/2

TASTIERINO RFID BYPASS SCANNER

RFID Keypad Bypass Scanner

SCALA

Fogli Totali 51

Foglio 15

Foglio Seguente 16

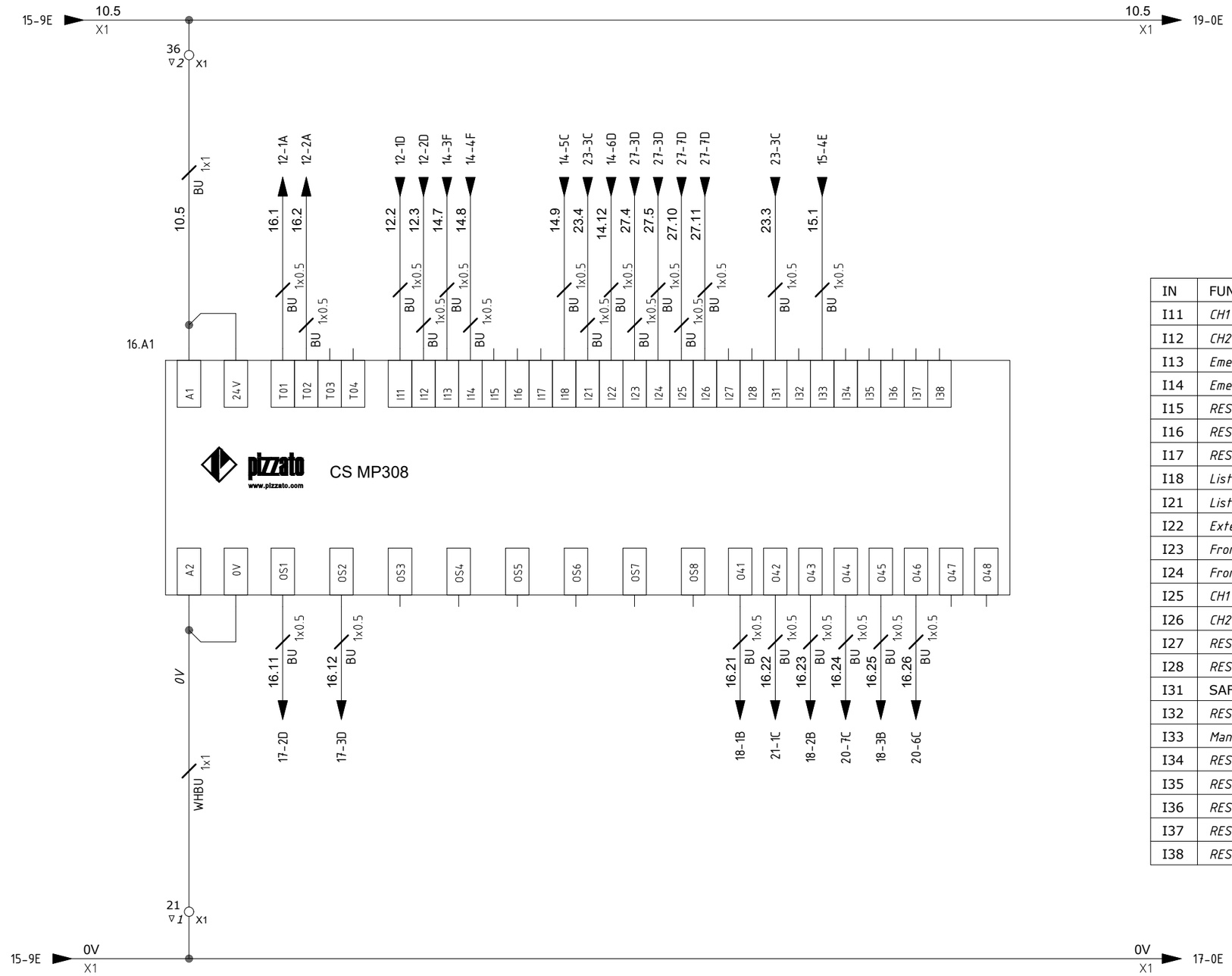

IN	FUNCTION	OUT	FUNCTION
I11	*CH1 Emergency Radio Remote Control*	OS1	*Emergency Key Controller*
I12	*CH2 Emergency Radio Control*	OS2	*Emergency Interlock Security*
I13	*Emergency on-board machine CH1*	OS3	*RESERVE*
I14	*Emergency on-board machine CH1*	OS4	*RESERVE*
I15	*RESERVE*	OS5	*RESERVE*
I16	*RESERVE*	OS6	*RESERVE*
I17	*RESERVE*	OS7	*RESERVE*
I18	*Listing Services*	OS8	*RESERVE*
I21	*Listing services from PLC*	O41	*Services Included*
I22	*External Relay Feedback*	O42	*Emergency OK*
I23	*Front Laser Scanner CH1*	O43	*Intercepted scanners*
I24	*Front Laser Scanner CH2*	O44	*PLC intercepted scanners*
I25	*CH1 Rear Laser Scanner*	O45	*Bypassed scanners*
I26	*CH2 Rear Laser Scanner*	O46	*PLC bypassed scanners*
I27	*RESERVE*	O47	*RESERVE*
I28	*RESERVE*	O48	*RESERVE*
I31	SAFETY OFF		
I32	*RESERVE*		
I33	*Manual Bypass*		
I34	*RESERVE*		
I35	*RESERVE*		
I36	*RESERVE*		
I37	*RESERVE*		
I38	*RESERVE*		

REV.	MODIFICA	DATA	FIRMA

COMMESSA M2555C4

GENERAL ELECTRIC APPLIANCE

MORELLO
MORELLO GIOVANNI S.R.L.

DATA 28/04/2026
DOC.Nr. M2555C4_1
FILE M2555C4_REV3_ENG
DISEGN. R.G.
APPR.

DOCUMENTO SGAE VC P 50/2

EMERGENZA
emergency

SCALA

Fogli Totali 51

Foglio 16

Foglio Seguente 17

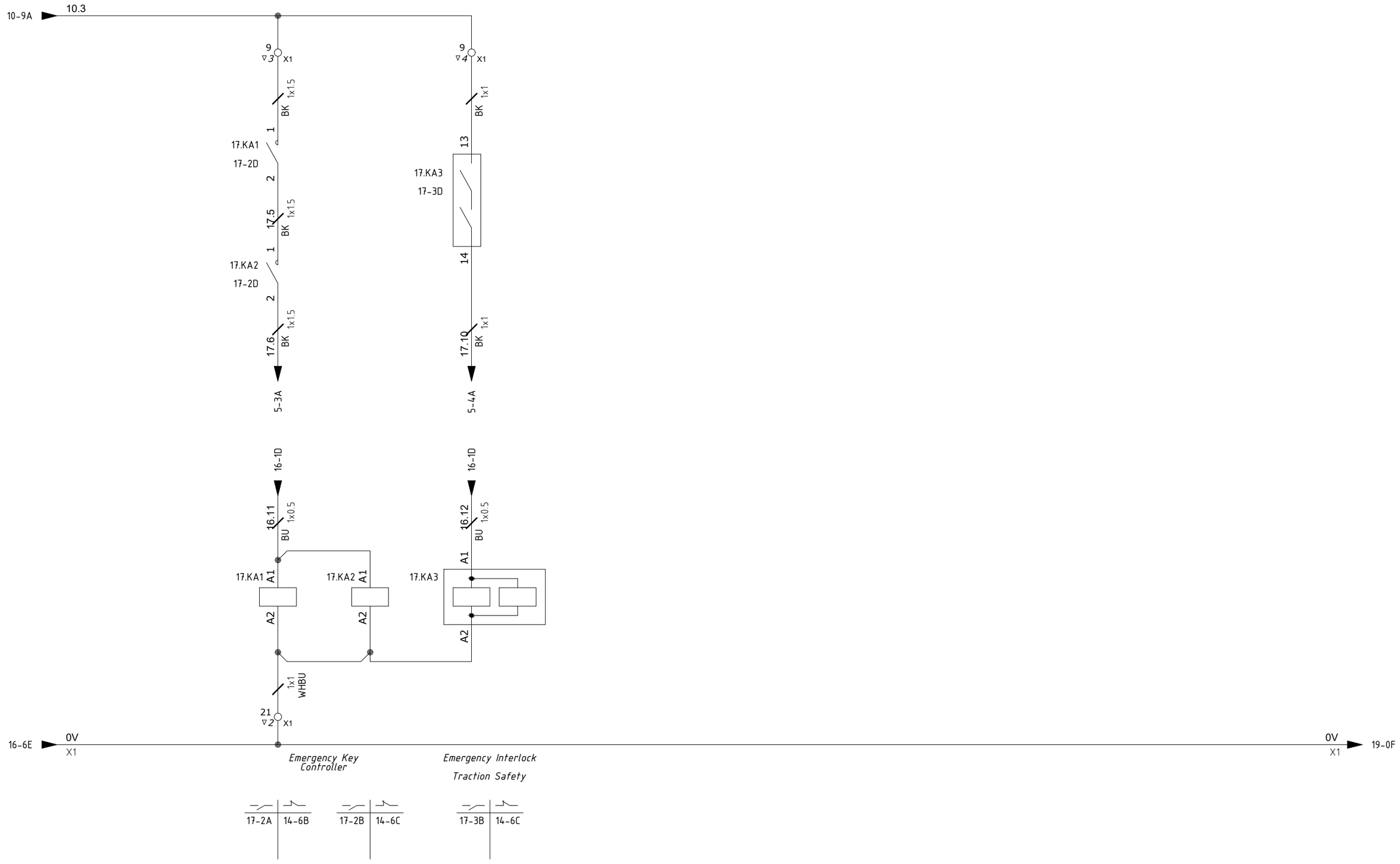

REV.	MODIFICA	DATA	FIRMA

COMMESSA M2555C4

GENERAL ELECTRIC APPLIANCE

MORELLO
MORELLO GIOVANNI S.R.L.

DATA 28/04/2026
DOC.Nr. M2555C4_1
FILE M2555C4_REV3_ENG
DISEGN. R.G.
APPR.

DOCUMENTO SGAE VC P 50/2

EMERGENZA
emergency

SCALA

Fogli Totali 51

Foglio 17

Foglio Seguente 18

REV.	MODIFICA	DATA	FIRMA

COMMESSA M2555C4

GENERAL ELECTRIC APPLIANCE

MORELLO

MORELLO GIOVANNI S.R.L.

DATA 28/04/2026

DOC.Nr. M2555C4_1

FILE M2555C4_REV3_ENG

DISEGN. R.G.

APPR.

DOCUMENTO SGAE VC P 50/2

EMERGENZA

emergency

SCALA

Fogli Totali 51

Foglio 18

Foglio Seguente 19

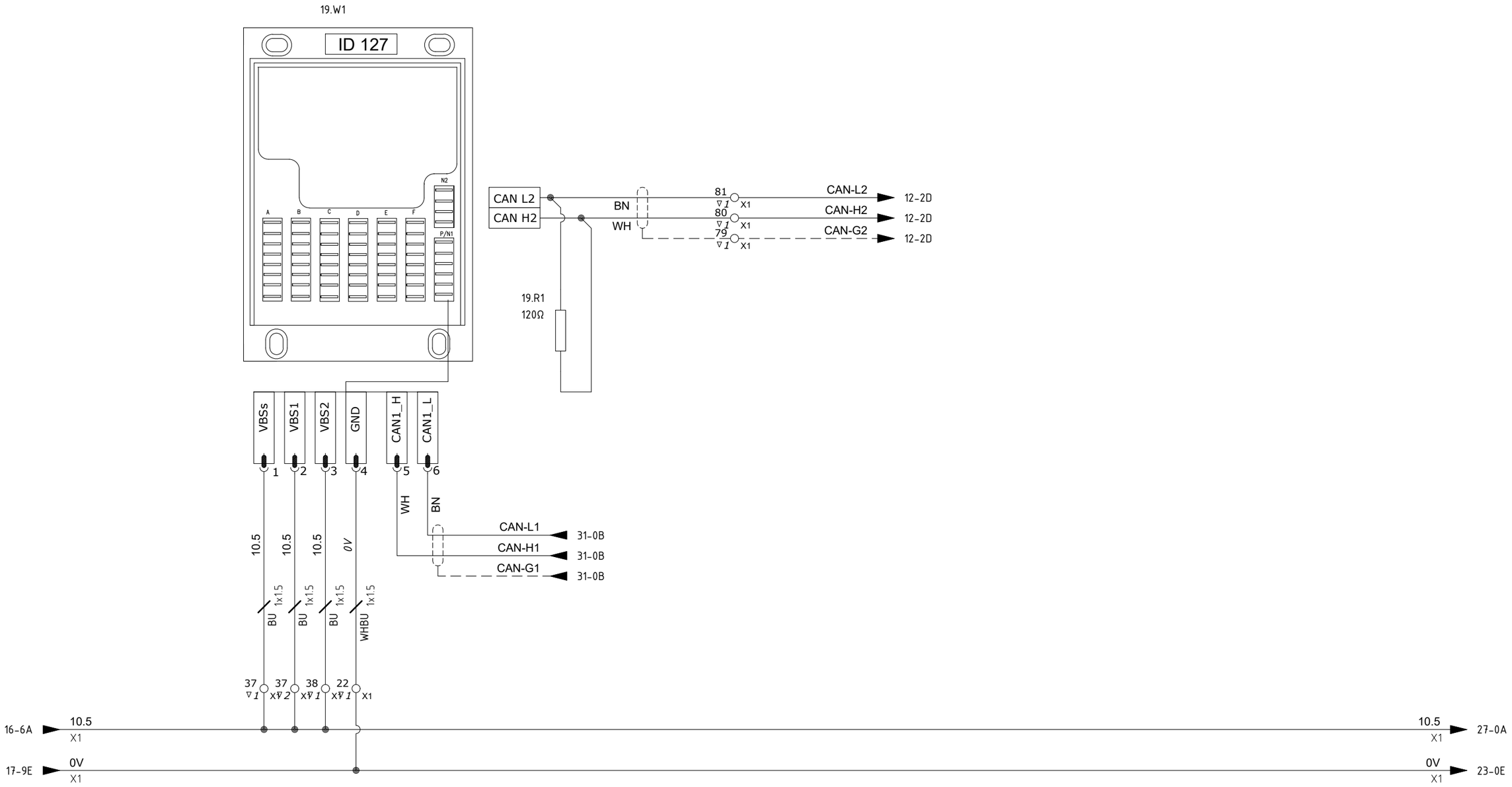

				COMMESSA M2555C4	DATA 28/04/2026	DOCUMENTO SGAE VC P 50/2	SCALA	
					DOC.Nr. M2555C4__1			Fogli Totali 51
				GENERAL ELECTRIC APPLIANCE	FILE M2555C4_REV3_ENG	PLC ALIMENTAZIONE E CANBUS		
				MORELLO GIOVANNI S.R.L.	DISEGN. R.G.	*PLC Power Supply and Canbus*	Foglio 19	Foglio Seguente 20
REV.	MODIFICA	DATA	FIRMA		APPR.			

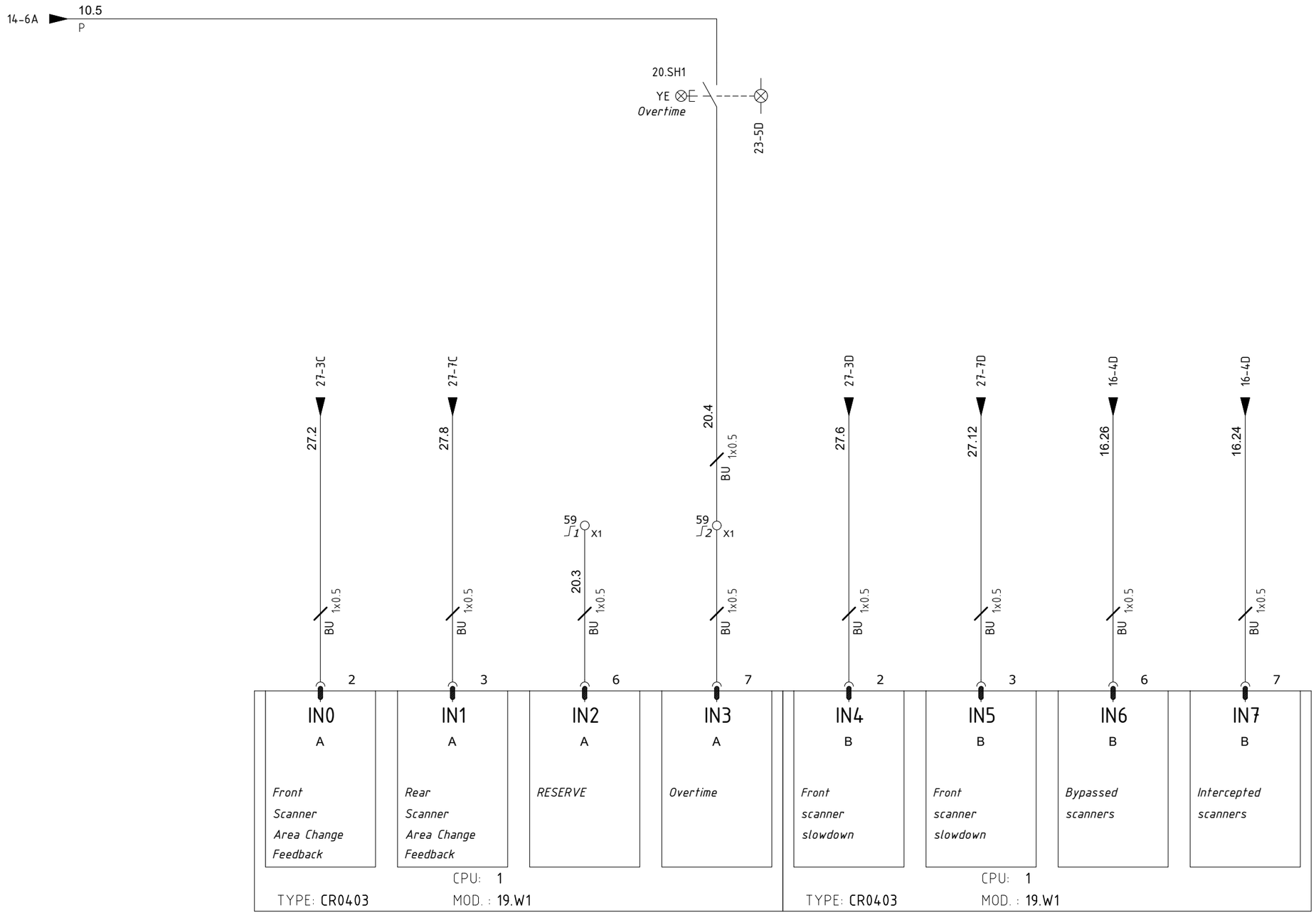

REV.	MODIFICA	DATA	FIRMA

COMMESSA M2555C4

GENERAL ELECTRIC APPLIANCE

MORELLO GIOVANNI S.R.L.

DATA 28/04/2026
DOC.Nr. M2555C4_1
FILE M2555C4_REV3_ENG
DISEGN. R.G.
APPR.

DOCUMENTO SGAE VC P 50/2

PLC INPUT

SCALA

Fogli Totali 51

Foglio 20

Foglio Seguente 21

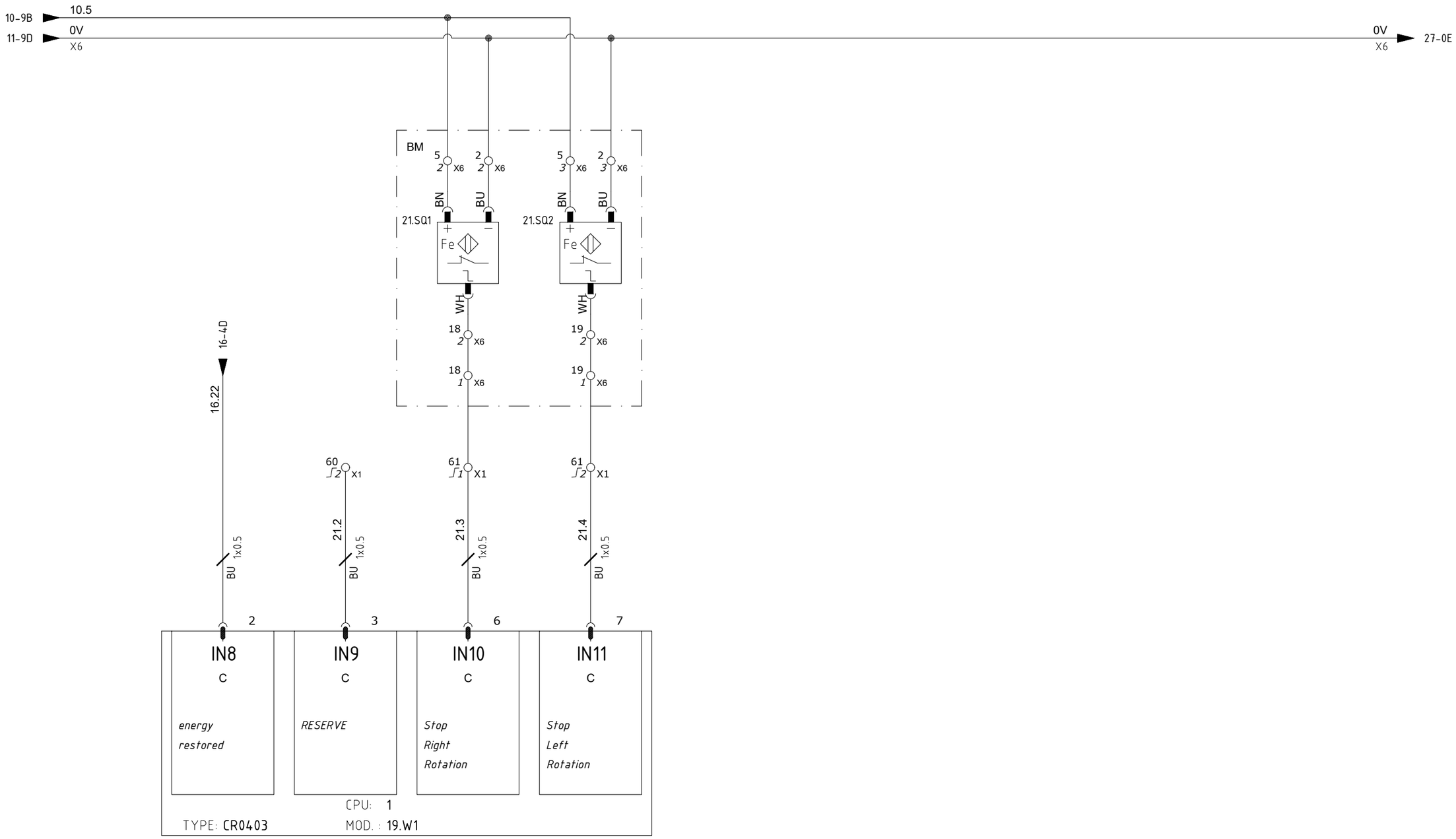

REV.	MODIFICA	DATA	FIRMA

COMMESSA M2555C4

GENERAL ELECTRIC APPLIANCE

MORELLO GIOVANNI S.R.L.

DATA 28/04/2026
DOC.Nr. M2555C4_1
FILE M2555C4_REV3_ENG
DISEGN. R.G.
APPR.

DOCUMENTO SGAE VC P 50/2

PLC INPUT

SCALA

Fogli Totali 51

Foglio 21

Foglio Seguente 23

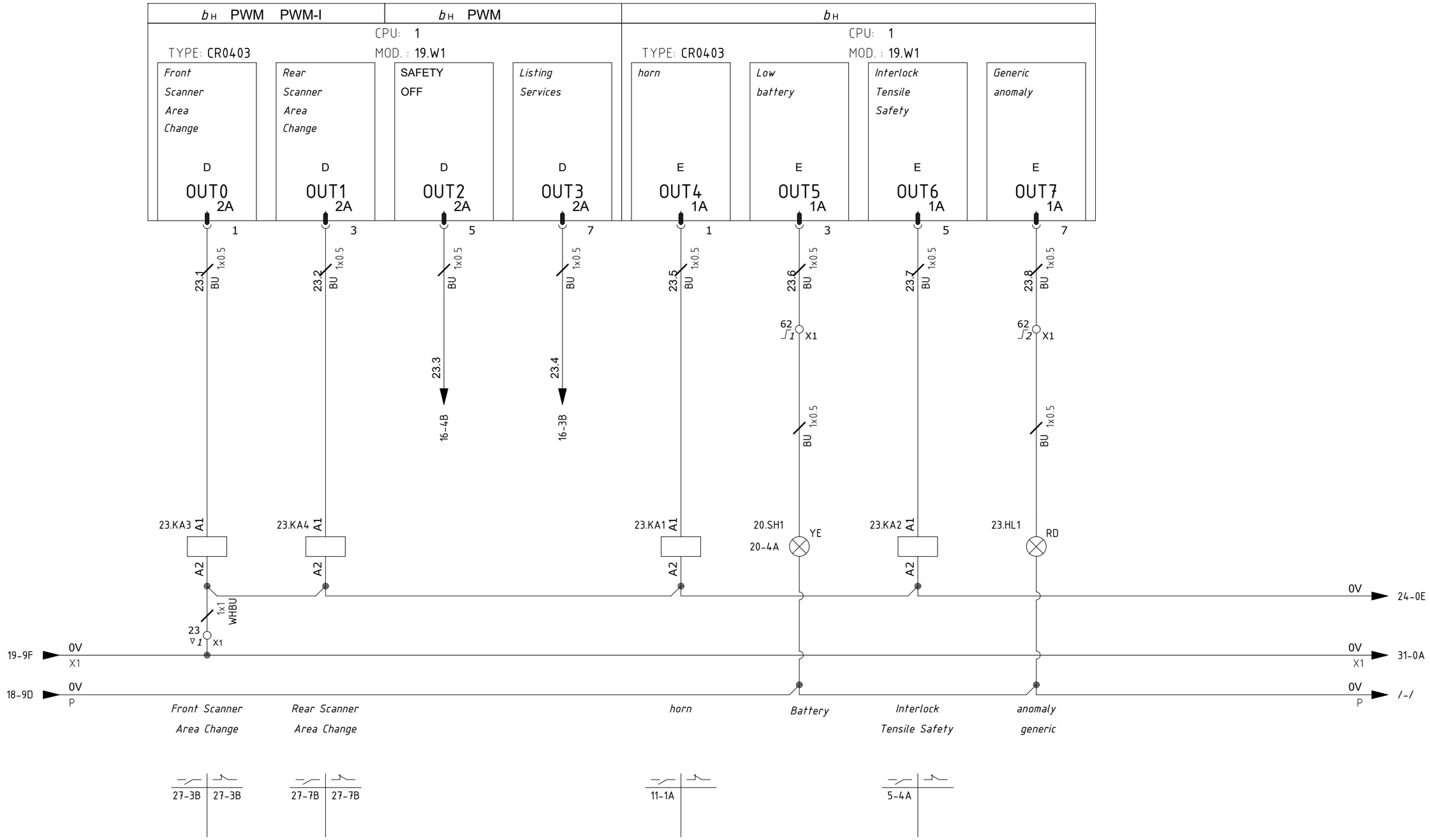

REV.	MODIFICA	DATA	FIRMA

COMMESSA M2555C4

GENERAL ELECTRIC APPLIANCE

MORELLO GIOVANNI S.R.L.

DATA 28/04/2026
DOC.Nr. M2555C4_1
FILE M2555C4_REV3_ENG
DISEGN. R.G.
APPR.

DOCUMENTO SGAE VC P 50/2

PLC OUTPUT

SCALA

Fogli Totali 51

Foglio 23

Foglio Seguente 24

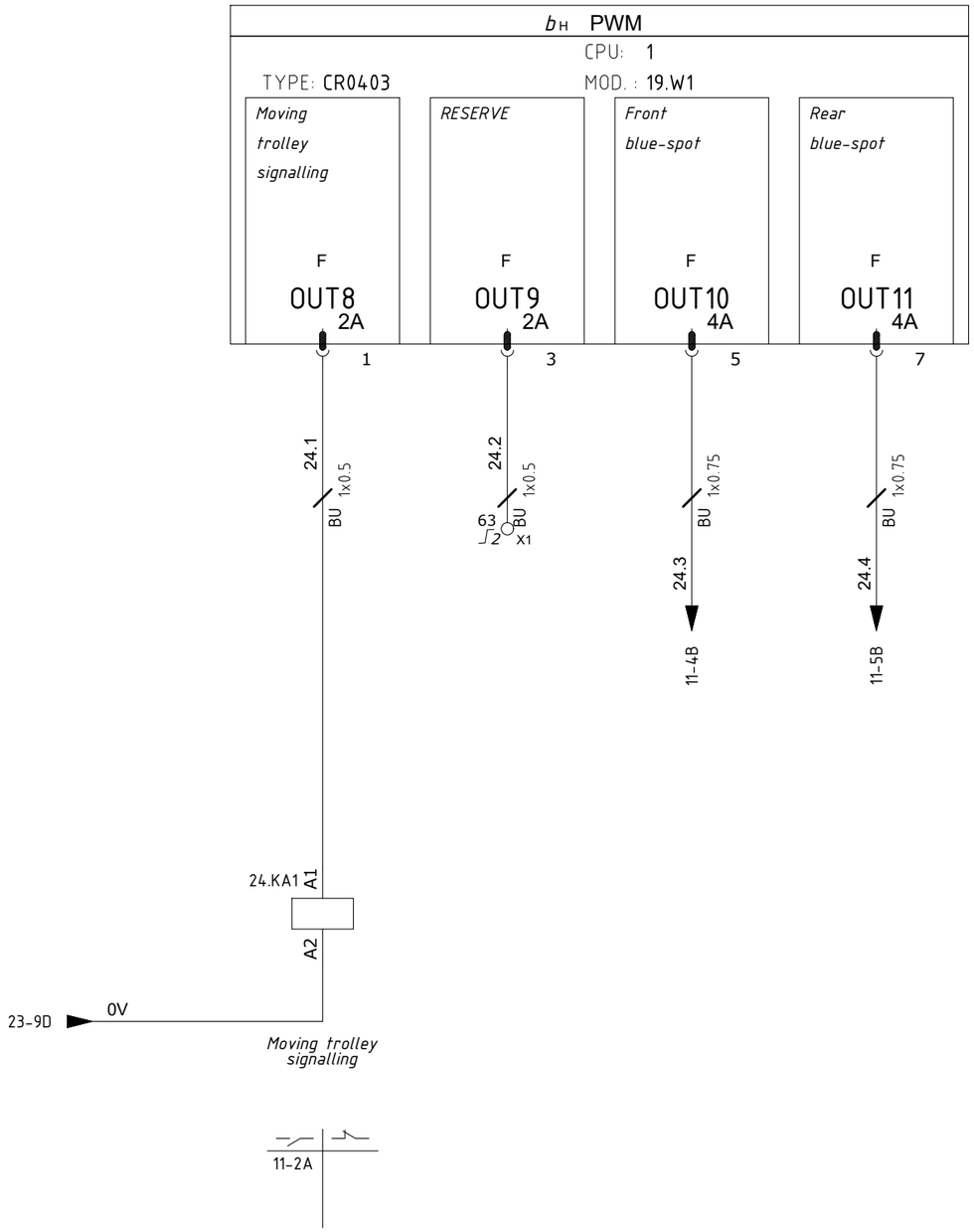

REV.	MODIFICA	DATA	FIRMA

COMMESSA M2555C4

GENERAL ELECTRIC APPLIANCE

MORELLO GIOVANNI S.R.L.

DATA 28/04/2026
DOC.Nr. M2555C4_1
FILE M2555C4_REV3_ENG
DISEGN. R.G.
APPR.

DOCUMENTO SGAE VC P 50/2

PLC OUTPUT

SCALA

Fogli Totali 51

Foglio 24

Foglio Seguente 27

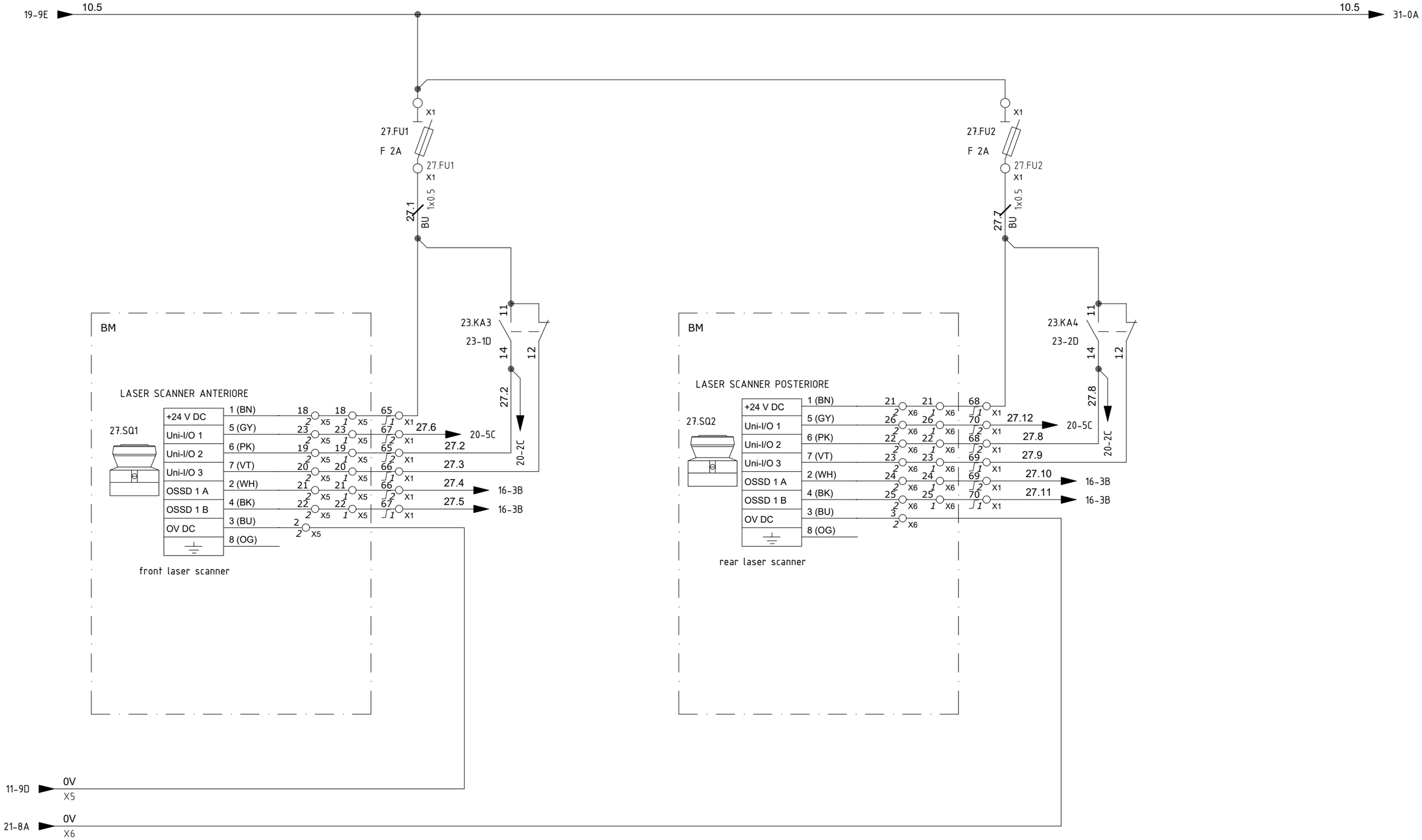

REV.	MODIFICA	DATA	FIRMA
03	CHANGED LASER SCANNER	08/07/26	R.G.

COMMESSA M2555C4

GENERAL ELECTRIC APPLIANCE

MORELLO GIOVANNI S.R.L.

DATA 28/04/2026
DOC.Nr. M2555C4_1
FILE M2555C4_REV3_ENG
DISEGN. R.G.
APPR.

DOCUMENTO SGAE VC P 50/2

LASER SCANNER

Laser Scanner

SCALA

Fogli Totali 51

Foglio 27

Foglio Seguente 31

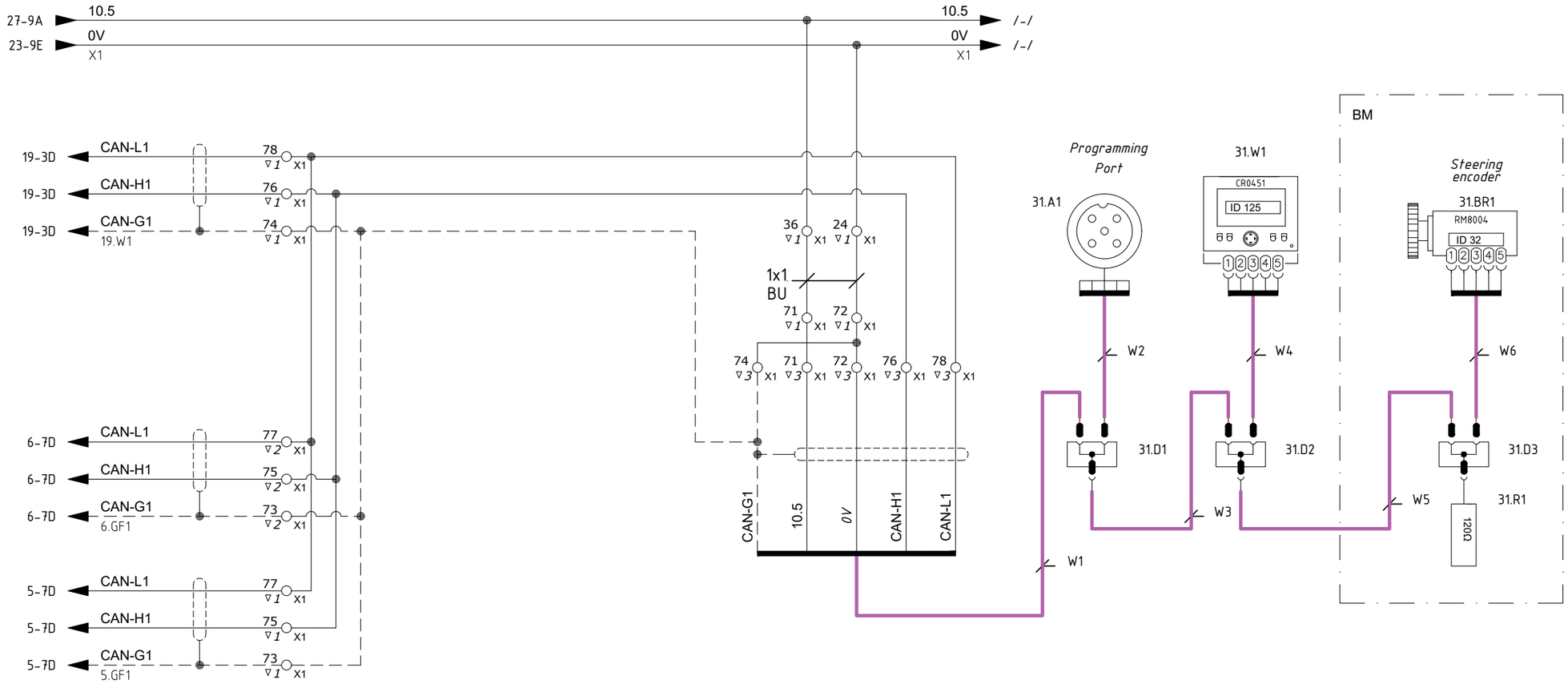

				COMMESSA M2555C4	DATA 28/04/2026	DOCUMENTO SGAE VC P 50/2	SCALA
					DOC.Nr. M2555C4_1		Fogli Totali 51
				GENERAL ELECTRIC APPLIANCE	FILE M2555C4_REV3_ENG	CAN BUS	
				MORELLO GIOVANNI S.R.L.	DISEGN. R.G.		Foglio 31 / Foglio Seguente 33
REV.	MODIFICA	DATA	FIRMA		APPR.		

WEIDMULLER
ZDK 2.5V
1689990000

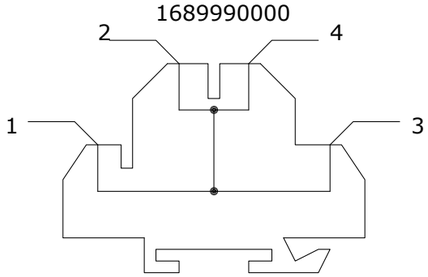

WEIDMULLER
ZDU 2.5-2/3AN
1706010000

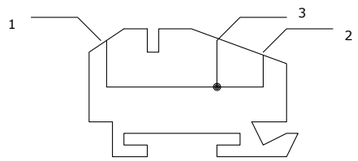

WEIDMULLER
ZDU 4-2/3AN
1770360000

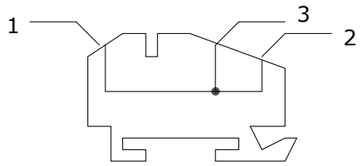

WEIDMULLER
ZDU 6-2/3AN
1771410000

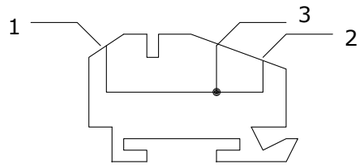

WEIDMULLER
ZDK 2.5 PE
1690000000

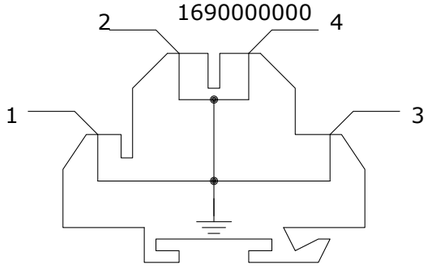

WEIDMULLER
ZPE 2.5-2/4AN
1706100000

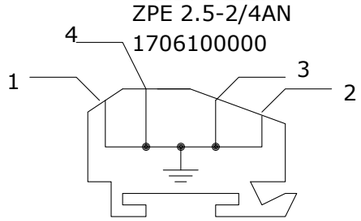

WEIDMULLER
ZPE 4-2/3AN
1770390000

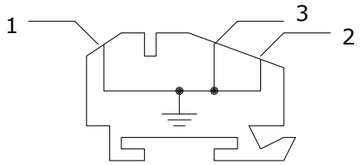

WEIDMULLER
ZPE 6-2/3AN
1771360000

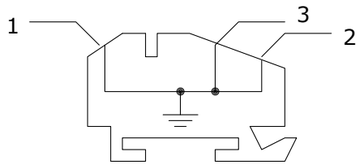

WEIDMULLER
ZDK 2.5
1674300000

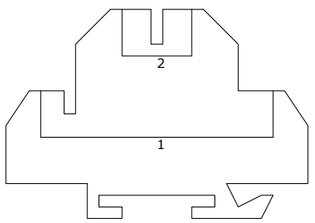

WEIDMULLER
ZDK 2.5 D1
1690020000

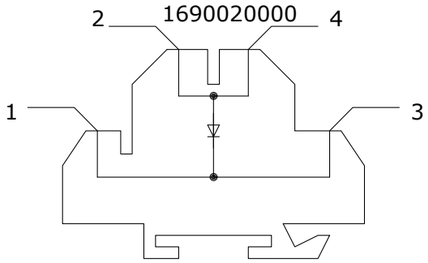

WAGO
2002-2408

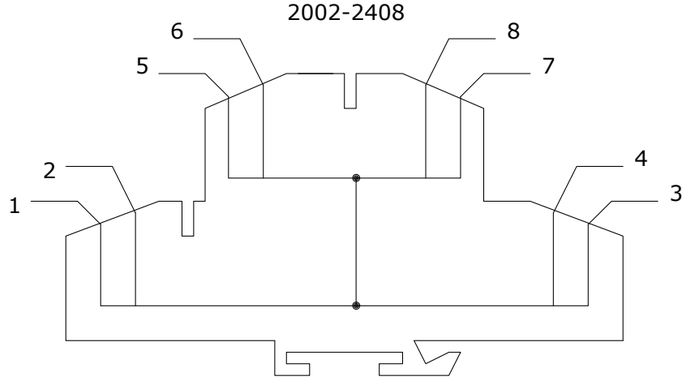

REV.	MODIFICA	DATA	FIRMA

COMMESSA M2555C4

GENERAL ELECTRIC APPLIANCE

MORELLO GIOVANNI S.R.L.

DATA 28/04/2026
DOC.Nr. M2555C4_1
FILE M2555C4_REV3_ENG
DISEGN. R.G.
APPR.

DOCUMENTO SGAE VC P 50/2

LEGENDA PUNTI CONNESSIONE MORSETTI

Legend Terminal Connection Points

SCALA

Fogli Totali 51

Foglio 33

Foglio Seguente 34

EP1 X1

Overview

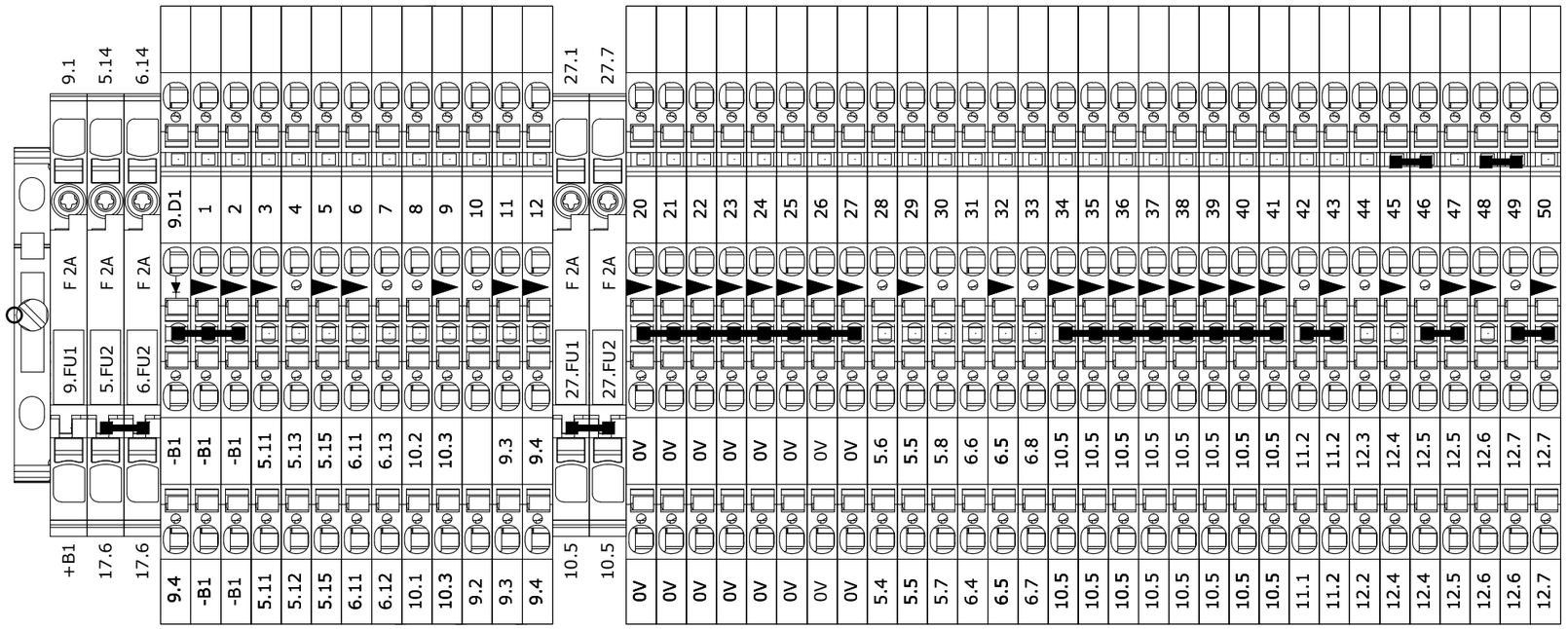

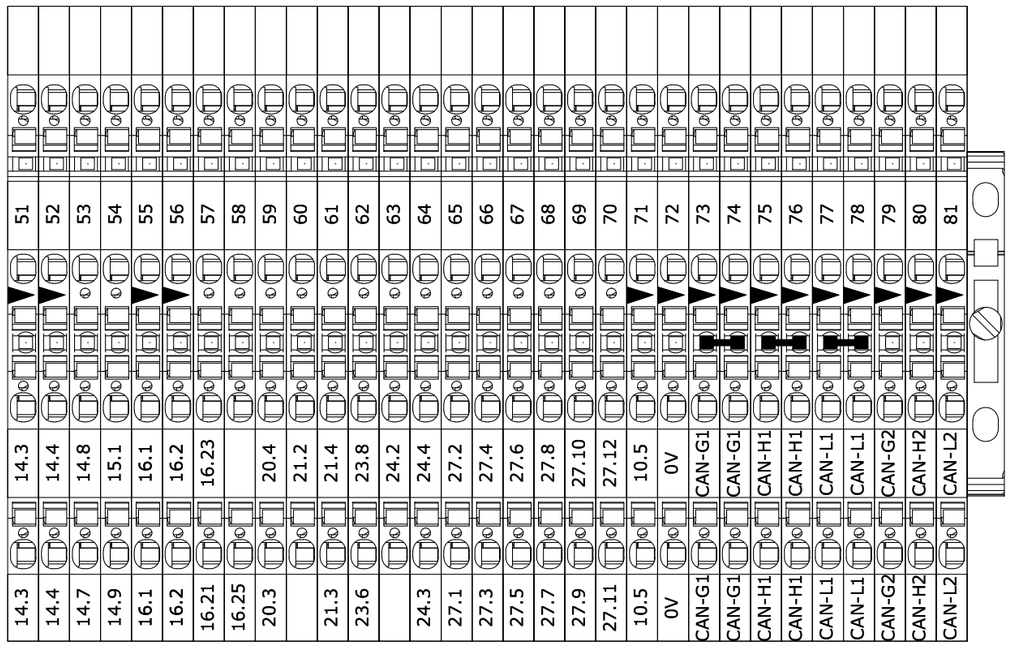

EP1 X1-G

Terminal block 15.A1

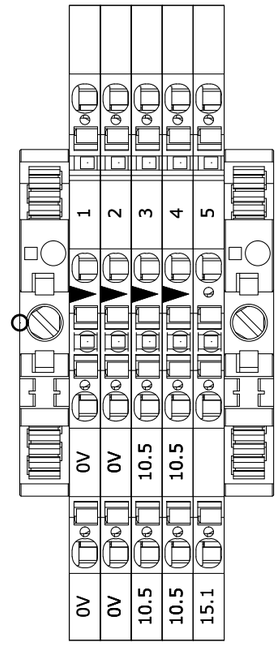

01		28/04/26	
REV.	MODIFICA	DATA	FIRMA

COMMESSA **M2555C4**

GENERAL ELECTRIC APPLIANCE

MORELLO GIOVANNI S.R.L.

DATA 28/04/2026
DOC.Nr. M2555C4_1
FILE M2555C4_REV3_ENG
DISEGN. R.G.
APPR.

DOCUMENTO **SGAE VC P 50/2**

MORSETTIERA QUADRO EP1

Panel terminal block EP1

SCALA

Fogli Totali 51

Foglio 34

Foglio Seguente 35

X5 .

BM X5
Front junction box

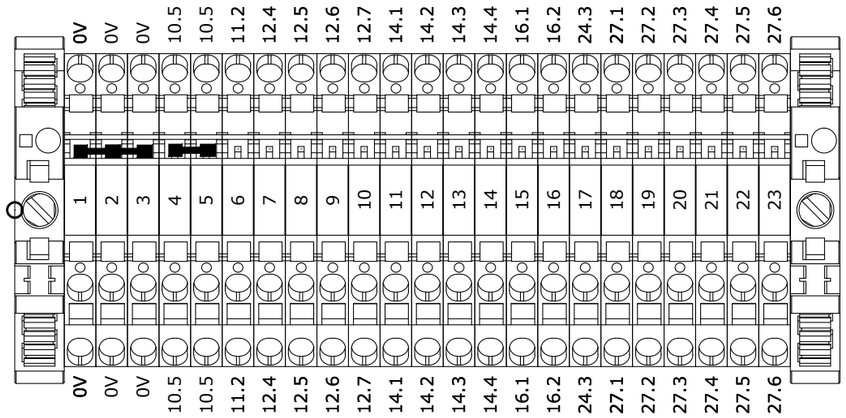

X6 .

BM X6
Rear junction box

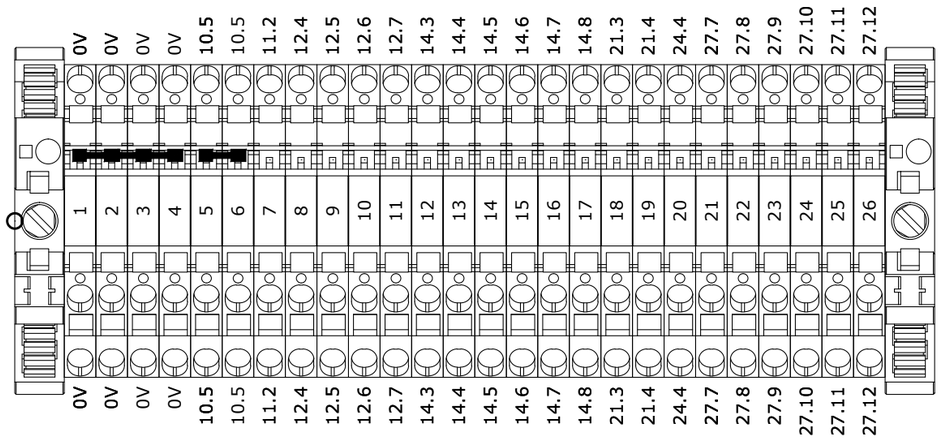

REV.	MODIFICA	DATA	FIRMA

COMMESSA M2555C4

GENERAL ELECTRIC APPLIANCE

MORELLO GIOVANNI S.R.L.

DATA 28/04/2026
DOC.Nr. M2555C4_1
FILE M2555C4_REV3_ENG
DISEGN. R.G.
APPR.

DOCUMENTO SGAE VC P 50/2

MORSETTIERE SCATOLE DI DERIVAZIONE
Junction box terminal blocks

SCALA

Fogli Totali 51

Foglio 35

Foglio Seguente 36

BM
XS3A
socket for front hand control

TYPE	*constructor*	*Wire ID*	NumI	Pin
CSHF 16	Ilme			
			12.4	1
			12.5	2
			12.6	3
			12.7	4
				5
				6
				7
				8
				9
				10
				11
				12
				13
				14
				15
				16
				PE
CHP 16 LS2	Ilme			

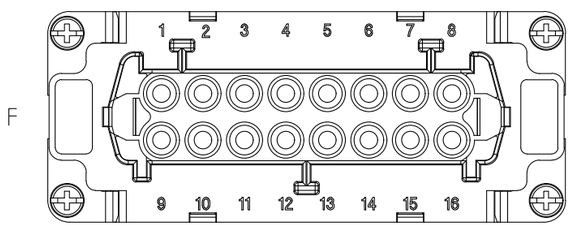

BM
XS3B
socket for rear push-button panel

TYPE	*constructor*	*Wire ID*	NumI	Pin
CSHF 16	Ilme			
			12.4	1
			12.5	2
			12.6	3
			12.7	4
				5
				6
				7
				8
				9
				10
				11
				12
				13
				14
				15
				16
				PE
CHP 16 LS2	Ilme			

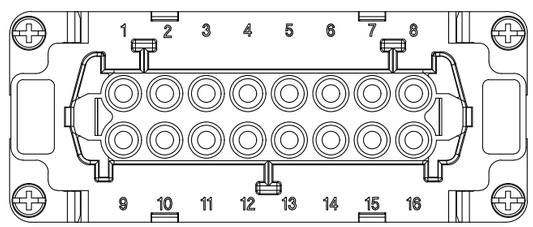

PB1
XP3
push-button plug with cable

TYPE	*constructor*	*Wire ID*	NumI	Pin
CSHM 16	Ilme			
			12.4	1
			12.5	2
			12.6	3
			12.7	4
				5
				6
				7
				8
				9
				10
				11
				12
				13
				14
				15
				16
				PE
CHV 16 L	Ilme			

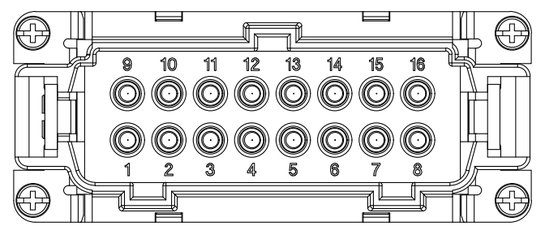

REV.	MODIFICA	DATA	FIRMA

COMMESSA M2555C4

GENERAL ELECTRIC APPLIANCE

MORELLO GIOVANNI S.R.L.

DATA 28/04/2026
DOC.Nr. M2555C4_1
FILE M2555C4_REV3_ENG
DISEGN. R.G.
APPR.

DOCUMENTO SGAE VC P 50/2

CONNETTORI
Connectors

SCALA

Fogli Totali 51

Foglio 36

Foglio Seguente 38

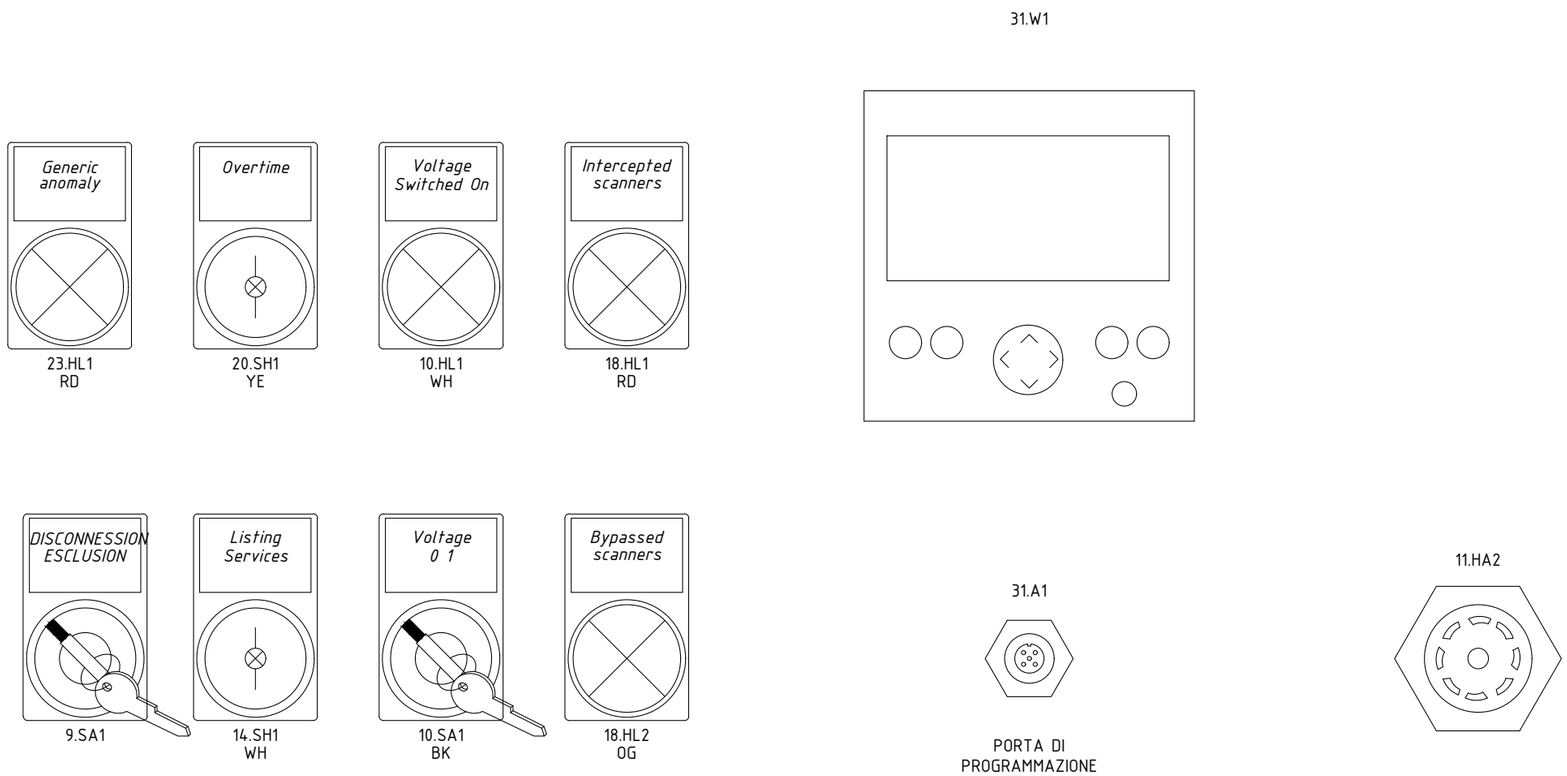

REV.	MODIFICA	DATA	FIRMA
01		28/04/26	

COMMESSA M2555C4

GENERAL ELECTRIC APPLIANCE

MORELLO GIOVANNI S.R.L.

DATA 28/04/2026
DOC.Nr. M2555C4_1
FILE M2555C4_REV3_ENG
DISEGN. R.G.
APPR.

DOCUMENTO SGAE VC P 50/2

LAYOUT PANNELLO FRONTALE QUADRO EP1

Quadro EP1 front panel layout

SCALA

Fogli Totali 51

Foglio 38

Foglio Seguente 39

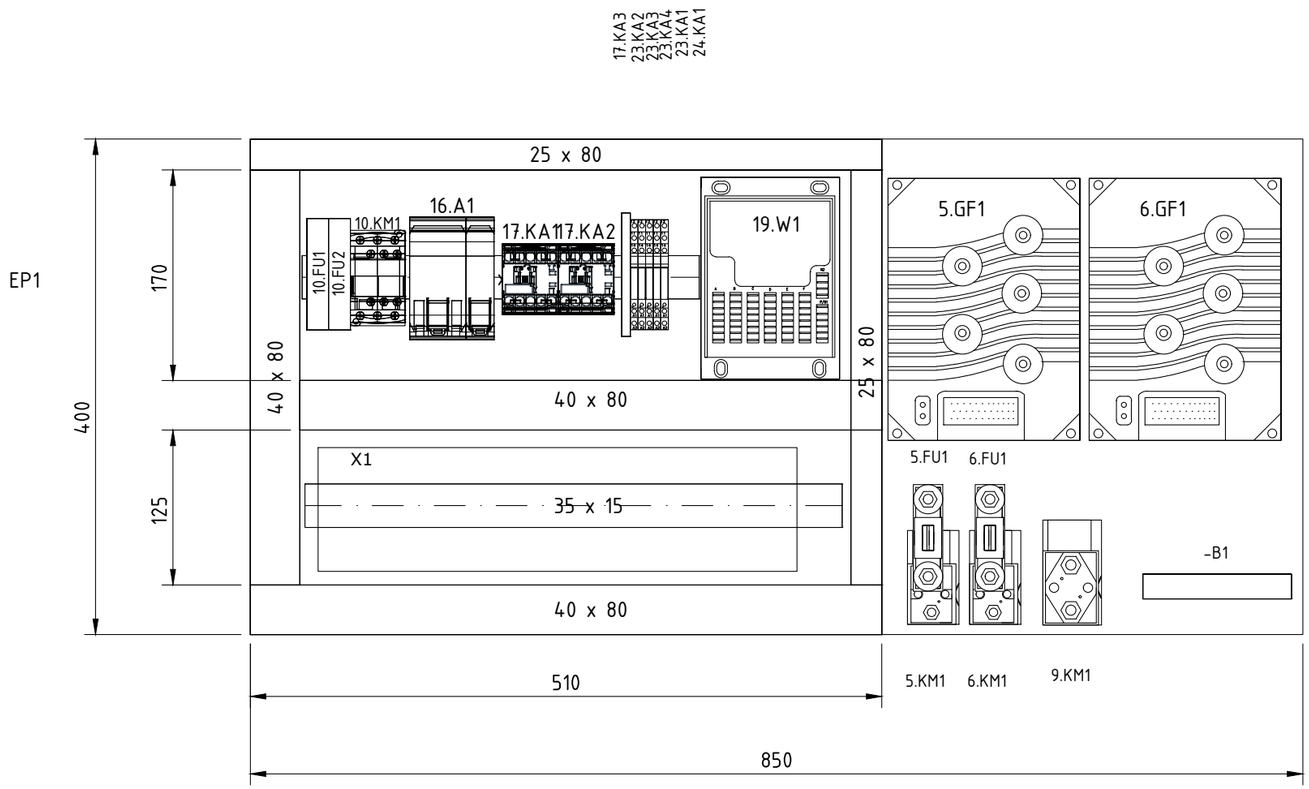

01		28/04/26	
REV.	MODIFICA	DATA	FIRMA

COMMESSA M2555C4

GENERAL ELECTRIC APPLIANCE

MORELLO GIOVANNI S.R.L.

DATA 28/04/2026
DOC.Nr. M2555C4_1
FILE M2555C4_REV3_ENG
DISEGN. R.G.
APPR.

DOCUMENTO SGAE VC P 50/2

LAYOUT QUADRO EP1

EP1 Panel Layout

SCALA

Fogli Totali 51

Foglio 39

Foglio Seguente 40

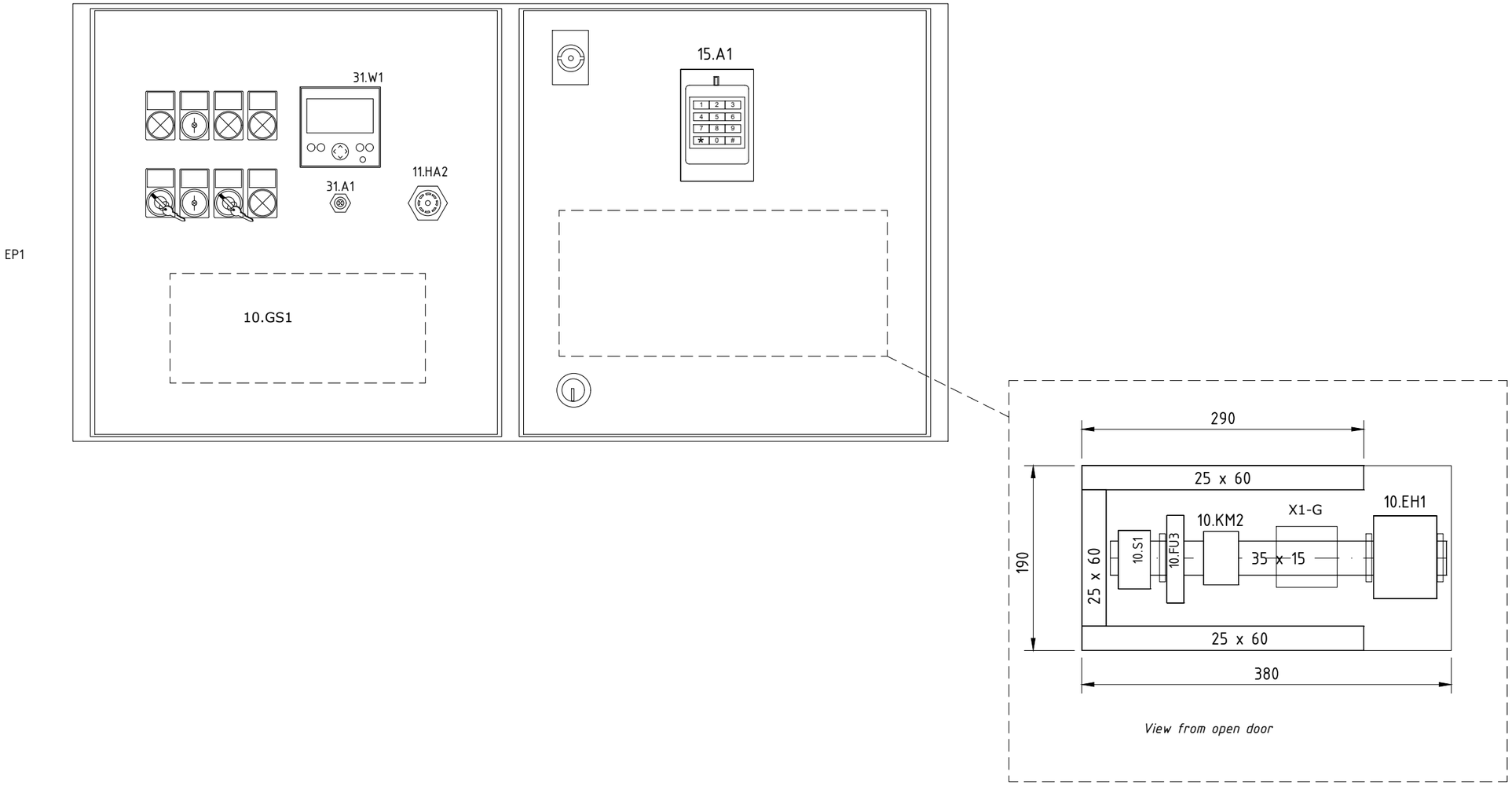

01		28/04/26	
REV.	MODIFICA	DATA	FIRMA

COMMESSA M2555C4

GENERAL ELECTRIC APPLIANCE

MORELLO GIOVANNI S.R.L.

DATA 28/04/2026
DOC.Nr. M2555C4_1
FILE M2555C4_REV3_ENG
DISEGN. R.G.
APPR.

DOCUMENTO SGAE VC P 50/2

LAYOUT QUADRO EP1

EP1 Panel Layout

SCALA

Fogli Totali 51

Foglio 40

Foglio Seguente 41

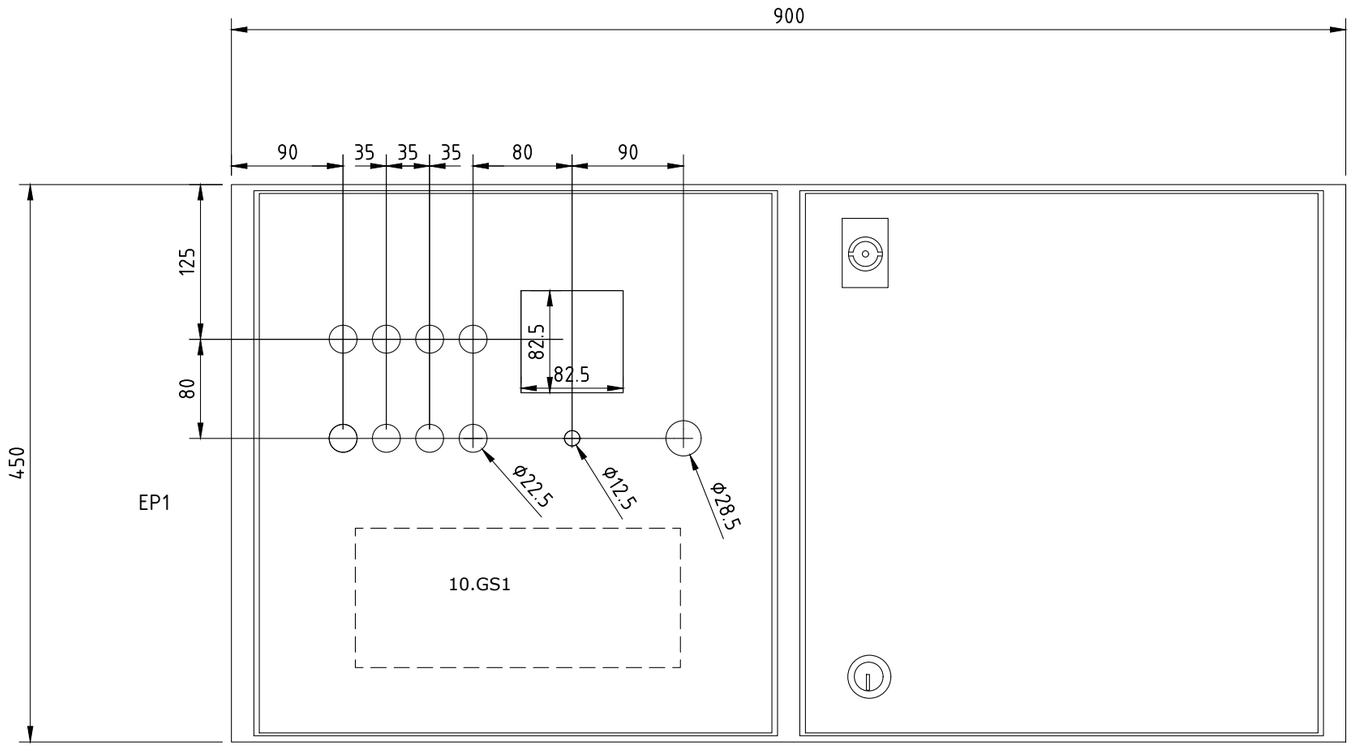

01		28/04/26	
REV.	MODIFICA	DATA	FIRMA

COMMESSA M2555C4

GENERAL ELECTRIC APPLIANCE

MORELLO GIOVANNI S.R.L.

DATA 28/04/2026
DOC.Nr. M2555C4_1
FILE M2555C4_REV3_ENG
DISEGN. R.G.
APPR.

DOCUMENTO SGAE VC P 50/2

LAYOUT QUADRO EP1

EP1 Panel Layout

SCALA

Fogli Totali 51

Foglio 41

Foglio Seguente 43

Name/Item	type/type	Descrizione/Description	Manufacturer/Marke	Quadro/Board	Q.ta/Q.ty	Internal code
4.GS1	80V 240Ah	80V 240Ah battery	WELCOME	BM	1	M_BAT_80V_0069
5.M1	AC242A	Motor Code: AC242A AC 80V, 8,000W 2.200 rpm, Rheintacho 64PPR, KTY84/130, B5/132, IP55, Brake E/M 75nm 80V dust ring and release lever.	Metalrota	BM	1	M_MAC_80V_0009
6.M1	AC242A	Motor Code: AC242A AC 80V, 8,000W 2.200 rpm, Rheintacho 64PPR, KTY84/130, B5/132, IP55, Brake E/M 75nm 80V dust ring and release lever.	Metalrota	BM	1	M_MAC_80V_0009
11.EL1	CLD 406-1	Blue spot 6-90V	Tyri	BM	1	M_LMP_FAR_0007
11.EL2	CLD 406-1	Blue spot 6-90V	Tyri	BM	1	M_LMP_FAR_0007
11.HA1	171287 171449	SL7-AP24-M Signal. Acus. 24V Multisound SL7-CB-EMH Base with external fixing holes	Eaton Eaton	BM	1 1	E_CCS_ACU_0001 E_ACC_CCS_0008
11.HL1	38665	Flashing CTL 600 yellow	Sirena	BM	1	M_LMP_MNC_0003
11.HL2	38665	Flashing CTL 600 yellow	Sirena	BM	1	M_LMP_MNC_0003
12.W1	4C0459-01259.A-BZA	SGAE STANDARD USA WIRED RADIO CONTROL	Hetronic	BM	1	E_CMD_RDC_0009
14.SB1	185156 216483	C22-PVT45P-K02-P65,Puls.,Emergency,Mushroom, 45mm,Unlock,A,Rotaz.,2,N/C,3,5m cable,without conn. M22-XBK1 ETIH. arr. em. d=60 4 languages	Eaton Eaton	BM	1 1	E_CCS_EME_0009 G_TAR_MTL_0001
14.SB2	185156 216483	C22-PVT45P-K02-P65,Puls.,Emergency,Mushroom, 45mm,Unlock,A,Rotaz.,2,N/C,3,5m cable,without conn. M22-XBK1 ETIH. arr. em. d=60 4 languages	Eaton Eaton	BM	1 1	E_CCS_EME_0009 G_TAR_MTL_0001
14.SB3	185156 216483	C22-PVT45P-K02-P65,Puls.,Emergency,Mushroom, 45mm,Unlock,A,Rotaz.,2,N/C,3,5m cable,without conn. M22-XBK1 ETIH. arr. em. d=60 4 languages	Eaton Eaton	BM	1 1	E_CCS_EME_0009 G_TAR_MTL_0001
14.SB4	185156 216483	C22-PVT45P-K02-P65,Puls.,Emergency,Mushroom, 45mm,Unlock,A,Rotaz.,2,N/C,3,5m cable,without conn. M22-XBK1 ETIH. arr. em. d=60 4 languages	Eaton Eaton	BM	1 1	E_CCS_EME_0009 G_TAR_MTL_0001
21.SQ1	IM5123 EVC006	Inductive Sensor Inductive Sensor - Sensor with High Sensing Distance Sensing Distance20 mm Shielded Mounting, 100 Hz Switching Frequency Antivalent Output Function, DC PNP40 x 40 x 54 mm Cable with M12 4-pin angled connector 10m	Ifm Ifm	BM	1 1	M_SSR_FPX_0016 E_CAV_CON_0029

REV.	MODIFICA	DATA	FIRMA
01		28/04/26	

COMMESSA M2555C4

GENERAL ELECTRIC APPLIANCE

MORELLO GIOVANNI S.R.L.

DATA 28/04/2026
DOC.Nr. M2555C4_1
FILE M2555C4_REV3_ENG
DISEGN. R.G.
APPR.

DOCUMENTO SGAE VC P 50/2

DISTINTA MATERIALI
Bill of Materials

SCALA

Fogli Totali 51

Foglio 43

Foglio Seguente 44

Name/Item	type/type	Descrizione/Description	Manufacturer/Marke	Quadro/Board	Q.ta/Q.ty	Internal code
21.SQ2	IM5123	Inductive Sensor Inductive Sensor - Sensor with High Sensing Distance Sensing Distance20 mm Shielded Mounting, 100 Hz Switching Frequency Antivalent Output Function, DC PNP40 x 40 x 54 mm	Ifm	BM	1	M_SSR_FPX_0016
	EVC006	Cable with M12 4-pin angled connector 10m	Ifm		1	E_CAV_CON_0029
27.SQ1	SZ-16V	16-field I/O laser scanner	KEYENCE	BM	1	M_SSR_LSC_0032
	SZ-P10PM	Cable with connector for SZ-16V L10M	KEYENCE		1	E_ACC_LSC_0002
	OP-86937	Horizontal mounting bracket with angular alignment	KEYENCE		1	M_SSR_LSC_0033
27.SQ2	SZ-16V	16-field I/O laser scanner	KEYENCE	BM	1	M_SSR_LSC_0032
	SZ-P10PM	Cable with connector for SZ-16V L10M	KEYENCE		1	E_ACC_LSC_0002
	OP-86937	Horizontal mounting bracket with angular alignment	KEYENCE		1	M_SSR_LSC_0033
31.BR1	RM8004	Absolute multi-turn encoders, absolute Ø 36.5 / L = 74 mm Hollow shaft open on one side, 12 mm	Ifm	BM	1	M_TRD_ENC_0003
31.D3	EBC116	Shunt M12 2F 1M	Ifm	BM	1	E_CON_MAS_0004
31.R1	E11589	Terminal Resistor F	Ifm	BM	1	E_CQD_CON_0009
W5	E11594	Canopen M12 M-F 5m Cable	Ifm	BM	1	E_CAV_CON_0009
W6	7000-40542-8030030	Canopen cable M12 M-F 90° 0.30m	MURR ELEKTRONIK	BM	1	E_CAV_CON_0048
X5	APV 14	CASS.AP 168x192x80 *NEW*	Ilme	BM	1	E_QDR_STD_0008
	APF 14	14VC Mounting Plate	Ilme		1	E_ACC_QDR_0025
X5	1706010000	ZDU 2.5-2/3AN Thru-Clamp, Locking Spring, 2.5 mm², 800 V, 24 A, Dark Beige	Weidmuller	BM	23	E_CQD_TER_0006
	1061200000	Fixing terminal for TS 35 WEW 35/2	Weidmuller		2	E_CQD_TER_0017
X6	APV 14	CASS.AP 168x192x80 *NEW*	Ilme	BM	1	E_QDR_STD_0008
	APF 14	14VC Mounting Plate	Ilme		1	E_ACC_QDR_0025
X6	1706010000	ZDU 2.5-2/3AN Thru-Clamp, Locking Spring, 2.5 mm², 800 V, 24 A, Dark Beige	Weidmuller	BM	26	E_CQD_TER_0006
	1061200000	Fixing terminal for TS 35 WEW 35/2	Weidmuller		2	E_CQD_TER_0017
XP2A	EEM 050 320 080	Black connector 80V 320A	Nuova elettra	BM	1	E_CQD_CON_0011
	EEM 050 200 104	Red Handle 320A	Nuova elettra		1	E_ACC_CON_0004
XS2	EEM 050 320 080	Black connector 80V 320A	Nuova elettra	BM	1	E_CQD_CON_0011
XS3A	CSHF 16	Socket Fruit, 16 pE poles, Squich spring clamp connection, 16A max, 500 V, 6kV, 3, with sockets, silver-plated, size 77.27, Frutti Series Class Tecnica	Ilme	BM	1	E_CON_FEM_0001
	CHP 16 LS2	Wall-mounted enclosure with single lock with lever and door, 2 outlets PG 21	Ilme		1	M_OGC_PPU_0001

REV.	MODIFICA	DATA	FIRMA
01		28/04/26	

COMMESSA M2555C4

GENERAL ELECTRIC APPLIANCE

MORELLO GIOVANNI S.R.L.

DATA 28/04/2026
DOC.Nr. M2555C4_1
FILE M2555C4_REV3_ENG
DISEGN. R.G.
APPR.

DOCUMENTO SGAE VC P 50/2

DISTINTA MATERIALI
Bill of Materials

SCALA

Fogli Totali 51

Foglio 44

Foglio Seguente 45

Name/Item	type/type	Descrizione/Description	Manufacturer/Marke	Quadro/Board	Q.ta/Q.ty	Internal code
XS3B	CSHF 16	Socket Fruit, 16 pE poles, Squich spring clamp connection, 16A max, 500 V, 6kV, 3, with sockets, silver-plated, size 77.27, Frutti Series Class Tecnica	Ilme	BM	1	E_CON_FEM_0001
	CHP 16 LS2	Wall-mounted enclosure with single lock with lever and door, 2 outlets PG 21	Ilme		1	M_OGC_PPU_0001

REV.	MODIFICA	DATA	FIRMA
01		28/04/26	

COMMESSA M2555C4

GENERAL ELECTRIC APPLIANCE

MORELLO GIOVANNI S.R.L.

DATA 28/04/2026
DOC.Nr. M2555C4_1
FILE M2555C4_REV3_ENG
DISEGN. R.G.
APPR.

DOCUMENTO SGAE VC P 50/2

DISTINTA MATERIALI

Bill of Materials

SCALA

Fogli Totali 51

Foglio 45

Foglio Seguente 46

Name/Item	type/type	Descrizione/Description	Manufacturer/Marke	Quadro/Board	Q.ta/Q.ty	Internal code
4.GS2	SPE GREEN6 80V 40A 480Vac	*Three-phase battery charger 480V 80V 40A*	WELCOME	CG	1	
XP2B	EEM 050 320 080	*Black connector 80V 320A*	Nuova elettra	CG	1	E_CQD_CON_0011
	EEM 050 200 104	*Red Handle 320A*	Nuova elettra		1	E_ACC_CON_0004

REV.	MODIFICA	DATA	FIRMA
01		28/04/26	

COMMESSA M2555C4

GENERAL ELECTRIC APPLIANCE

MORELLO GIOVANNI S.R.L.

DATA 28/04/2026
DOC.Nr. M2555C4_1
FILE M2555C4_REV3_ENG
DISEGN. R.G.
APPR.

DOCUMENTO SGAE VC P 50/2

DISTINTA MATERIALI

Bill of Materials

SCALA

Fogli Totali 51

Foglio 46

Foglio Seguente 47

Name/Item	type/type	Descrizione/Description	Manufacturer/Marke	Quadro/Board	Q.ta/Q.ty	Internal code
5.FU1	CNL350DIN	Traction Fuse 350A	MERSEN	EP1	1	
5.FU2	0102002	Fuse 5x20F STD 2A 250V	Italweber	EP1	1	E_CQD_FUS_0016
5.GF1	470436321	1234SE-6321 48-80V 350A	Curtis	EP1	1	E_CQD_AZN_0005
5.KM1	C30001	Contactor SU80B-5004 24V CO 150A(interrupted)/200A(uninterrupted)	ZTP	EP1	1	E_CQD_CNT_0008
6.FU1	CNL350DIN	Traction Fuse 350A	MERSEN	EP1	1	
6.FU2	0102002	Fuse 5x20F STD 2A 250V	Italweber	EP1	1	E_CQD_FUS_0016
6.GF1	470436321	1234SE-6321 48-80V 350A	Curtis	EP1	1	E_CQD_AZN_0005
6.KM1	C30001	Contactor SU80B-5004 24V CO 150A(interrupted)/200A(uninterrupted)	ZTP	EP1	1	E_CQD_CNT_0008
9.FU1	0102002	Fuse 5x20F STD 2A 250V	Italweber	EP1	1	E_CQD_FUS_0016
9.KM1	C29988	Contactor SU280B-1016 80V CO 250A(interrupted)/350A(Uninterrupted)	ZTP	EP1	1	E_CQD_CNT_0007
9.S1	FR 5F1-M2	1No 1NC limit switch with maintenance button	Pizzato Elettrica	EP1	1	
9.S2	FR 5F1-M2	1No 1NC limit switch with maintenance button	Pizzato Elettrica	EP1	1	
9.SA1	ZB4BG4	Keyed selector switch	Schneider Electric	EP1	1	E_CCS_KEY_0001
	ZB4BZ009	Fixing base for electrical elements - for units Ø 22 mm XB4-A - 10/pack	Schneider Electric		1	E_ACC_CCS_0007
	ZBE101	Single contact block for circular pushbutton Ø 22 mm - 1NO with silver alloy screw terminals	Schneider Electric		2	E_CCS_CNT_0007
9.SA2	ZB4BG6F015	Fiat 2 Position Key Selector Head	Schneider Electric	EP1	1	
	ZB4BZ009	Fixing base for electrical elements - for units Ø 22 mm XB4-A - 10/pack	Schneider Electric		1	E_ACC_CCS_0007
	ZBE101	Single contact block for circular pushbutton Ø 22 mm - 1NO with silver alloy screw terminals	Schneider Electric		1	E_CCS_CNT_0007
10.EH1	02801.1-00	CS 028 Series Heating Fan, 24VDC -10% 200W	STEGO	EP1	1	E_CQD_VEN_0003
10.FU1	DF101	Fuse holder 32A 10x38 1P	Schneider Electric	EP1	1	E_CQD_FUS_0024
	FNQ-20	FNQ-20 Buss Midget Fuse	Eaton		1	
10.FU2	DF101	Fuse holder 32A 10x38 1P	Schneider Electric	EP1	1	E_CQD_FUS_0024
	FNQ-20	FNQ-20 Buss Midget Fuse	Eaton		1	
10.FU3	DF101	Fuse holder 32A 10x38 1P	Schneider Electric	EP1	1	E_CQD_FUS_0024
	FNQ-12	FNQ-12 Buss Midget Fuse	Eaton		1	
10.GS1	RSD-500D-24	DC/DC converter 67-154/24V 20A	Mean Well	EP1	1	E_ALM_DTD_0008
10.HL1	ZB4BV013	White pilot light head for ø22 units with smooth lens	Schneider Electric	EP1	1	E_CCS_LED_0012
	ZB4BZ009	Fixing base for electrical elements - for units Ø 22 mm XB4-A - 10/pack	Schneider Electric		1	E_ACC_CCS_0007
	ZBVB1	White light element for Ø22 24V head	Schneider Electric		1	E_CCS_LED_0039
10.KM1	LC1D18EHE	Tesys D Contactor - 3P(3 NO) 1 NO 1 NC - AC-3 - <= 440 V 18 A - 48-130 V AC/DC Coil - Screw terminals	Schneider Electric	EP1	1	E_CQD_RLY_0050
10.KM2	3TG1001-0BB4	small cont. 3L 1R 24VDC	Siemens	EP1	1	

REV.	MODIFICA	DATA	FIRMA
01		28/04/26	

COMMESSA M2555C4

GENERAL ELECTRIC APPLIANCE

MORELLO GIOVANNI S.R.L.

DATA 28/04/2026
DOC.Nr. M2555C4_1
FILE M2555C4_REV3_ENG
DISEGN. R.G.
APPR.

DOCUMENTO SGAE VC P 50/2

DISTINTA MATERIALI
Bill of Materials

SCALA

Fogli Totali 51

Foglio 47

Foglio Seguente 48

Name/Item	type/type	Descrizione/Description	Manufacturer/Marke	Quadro/Board	Q.ta/Q.ty	Internal code
10.S1	11100.0-01	NC thermostat -10°C... 50°C	STEGO	EP1	1	H_ELM_TRS_0010
11.HA2	23265800000	IP65 sounder with volume control	Pfannenberg	EP1	1	E_CQD_VEN_0013
	28300000011	Gasket for sounder P28 DMX	Pfannenberg		1	E_CQD_VEN_0014
14.SH1	ZB4BW313	White luminous wire pushbutton head for Ø22 units with spring return	Schneider Electric	EP1	1	E_CCS_PLS_0005
	ZB4BZ009	Fixing base for electrical elements - for units Ø 22 mm XB4-A - 10/pack	Schneider Electric		1	E_ACC_CCS_0007
	ZBE101	Single contact block for circular pushbutton Ø 22 mm - 1NO with silver alloy screw terminals	Schneider Electric		1	E_CCS_CNT_0007
	ZBVB1	White light element for Ø22 24V head	Schneider Electric		1	E_CCS_LED_0039
15.A1	GSK1-W	Access control reader with PIN or RFID 24VDC, IP66 relay output	G.OSTI	EP1	1	E_CQD_BRD_0122
16.A1	CS MP308M0	CS MP308M0 Programmable Multifunction Safety Module	Pizzato Elettrica	EP1	1	E_CQD_BRD_0061
17.KA1	3RT2018-1BB42	Power Contactor, AC-3 16 A, 7.5 kW / 400 V 1 NC, 24 V DC 3 Poles, Size S00 Screw Terminals	Siemens	EP1	1	E_CQD_RLY_0026
	3RT2916-1LM00	LED diode,DC 24-70V,S00,	Siemens		1	E_CCS_DID_0002
17.KA2	3RT2018-1BB42	Power Contactor, AC-3 16 A, 7.5 kW / 400 V 1 NC, 24 V DC 3 Poles, Size S00 Screw Terminals	Siemens	EP1	1	E_CQD_RLY_0026
	3RT2916-1LM00	LED diode,DC 24-70V,S00,	Siemens		1	E_CCS_DID_0002
17.KA3	2702663	Relé SLIM SIL3 1NO+1NC 24VDC	Phoenix Contact	EP1	1	E_CQD_RLY_0046
18.HL1	ZB4BV043	Red pilot light head for ø22 units with flat lens	Schneider Electric	EP1	1	E_CCS_LED_0014
	ZB4BZ009	Fixing base for electrical elements - for units Ø 22 mm XB4-A - 10/pack	Schneider Electric		1	E_ACC_CCS_0007
	ZBVB1	White light element for Ø22 24V head	Schneider Electric		1	E_CCS_LED_0039
18.HL2	ZB4BV053	Orange pilot light head for Ø22 units with flat lens	Schneider Electric	EP1	1	E_CCS_LED_0011
	ZB4BZ009	Fixing base for electrical elements - for units Ø 22 mm XB4-A - 10/pack	Schneider Electric		1	E_ACC_CCS_0007
	ZBVB1	White light element for Ø22 24V head	Schneider Electric		1	E_CCS_LED_0039
19.R1	R120Ω	Resistance 120Ω	Various	EP1	1	E_CQD_RES_0003
19.W1	CR0403	PLC 12 inputs and 12 outputs	ifm	EP1	1	E_CQD_PLC_0001
	EC0456	Contact Kit	Ifm		1	E_CQD_TER_0003
20.SH1	ZB4BW383	Yellow luminous wire pushbutton head for Ø22 units with spring return	Schneider Electric	EP1	1	E_CCS_PLS_0001
	ZB4BZ009	Fixing base for electrical elements - for units Ø 22 mm XB4-A - 10/pack	Schneider Electric		1	E_ACC_CCS_0007
	ZBVB1	White light element for Ø22 24V head	Schneider Electric		1	E_CCS_LED_0039

Name/Item	type/type	Descrizione/Description	Manufacturer/Marke	Quadro/Board	Q.ta/Q.ty	Internal code
20.SH1	ZBE101	Single contact block for circular pushbutton Ø 22 mm - 1NO with silver alloy screw terminals	Schneider Electric	EP1	1	E_CCS_CNT_0007
23.HL1	ZB4BV043	Red pilot light head for ø22 units with flat lens	Schneider Electric	EP1	1	E_CCS_LED_0014
	ZB4BZ009	Fixing base for electrical elements - for units Ø 22 mm XB4-A - 10/pack	Schneider Electric		1	E_ACC_CCS_0007
	ZBVB1	White light element for Ø22 24V head	Schneider Electric		1	E_CCS_LED_0039
23.KA1	34.51.7.024.0010	Mini Relay for EMR 1CO 24VDC 6A DC	Finder	EP1	1	E_CQD_RLY_0028
	93.61.7.024	socket with socket clamps Masterbasic	Finder		1	E_ACC_RLY_0007
23.KA2	34.51.7.024.0010	Mini Relay for EMR 1CO 24VDC 6A DC	Finder	EP1	1	E_CQD_RLY_0028
	93.61.7.024	socket with socket clamps Masterbasic	Finder		1	E_ACC_RLY_0007
23.KA3	34.51.7.024.0010	Mini Relay for EMR 1CO 24VDC 6A DC	Finder	EP1	1	E_CQD_RLY_0028
	93.61.7.024	socket with socket clamps Masterbasic	Finder		1	E_ACC_RLY_0007
23.KA4	34.51.7.024.0010	Mini Relay for EMR 1CO 24VDC 6A DC	Finder	EP1	1	E_CQD_RLY_0028
	93.61.7.024	socket with socket clamps Masterbasic	Finder		1	E_ACC_RLY_0007
24.KA1	34.81.7.024.9024	Mini Relay for SSR 1No 24VDC 6A	Finder	EP1	1	E_CQD_RLY_0029
	93.61.7.024	socket with socket clamps Masterbasic	Finder		1	E_ACC_RLY_0007
25 x 60	02577	T1-EN 25X60 G CAN. CABL.	Bocchiotti	EP1	0.72	E_CNL_PLA_0008
25 x 80	02578	T1-EN 25X80 G CAN. CABL.	Bocchiotti	EP1	0.87	E_CNL_PLA_0003
27.FU1	0102002	Fuse 5x20F STD 2A 250V	Italweber	EP1	1	E_CQD_FUS_0016
27.FU2	0102002	Fuse 5x20F STD 2A 250V	Italweber	EP1	1	E_CQD_FUS_0016
31.A1	E73008	M12 5pin A Panel Connector	Ifm	EP1	1	E_CQD_CON_0012
	1456200	M12 dust cap	Phoenix Contact		1	E_ACC_CON_0012
31.D1	EBC116	Shunt M12 2F 1M	Ifm	EP1	1	E_CON_MAS_0004
31.D2	EBC116	Shunt M12 2F 1M	Ifm	EP1	1	E_CON_MAS_0004
31.W1	CR0451	Display LCD	Ifm	EP1	1	E_CQD_HMI_0001
	EC0403	Mounting bracket	Ifm		1	E_ACC_HMI_0001
35 x 15	023650 b=Ø5,5	TS 35x15 b=Ø5,5	Weidmuller	EP1	1.12	E_GUI_DIN_0001
40 x 80	02581	T1-EN 40X80 G CAN. CABL.	Bocchiotti	EP1	1.35	E_CNL_PLA_0002
-B1	ISO2190	PA insulating pedestal M8 H35	Teknomega	EP1	2	E_CQD_ISO_0002
EP1	BIE/132	Quadro 900x450x250 2 doors	Zanardo	EP1	1	E_QDR_STD_0130
	8004	Yale Key Lock	Zanardo		1	E_ACC_QDR_0010
	Electrical voltage sticker 140x140x140	Electrical voltage sticker 140x140x140	Various		1	G_TAR_ADS_0007
	80v 140x30 sticker	Adhesive plate 80V 140x30	Various		1	G_TAR_ADS_0017
	24v 140x30 sticker	Adhesive plate 24V 140x30	Various		1	G_TAR_ADS_0001
	268000-GB	Red Sticker Plate in English DPR	Cembre		1	G_TAR_ADS_0015
	ZB5SZ3	Black Circular Shutter Cap Ø22	Schneider Electric		3	E_ACC_CCS_0004
EP1	RRPTAL85040010	aluminum plate 850x400x10	REAR	EP1	1	E_ACC_QDR_0012
W1	E11598	Canopen M12 M-Cable 2m	Ifm	EP1	1	E_CAV_CON_0016
W2	7000-40542-8030110	Canopen cable M12 M-F 90° 1.10m	MURR ELEKTRONIK	EP1	1	E_CAV_CON_0061
W3	E11591	Canopen cable M12 M-F 0.30m	Ifm	EP1	1	E_CAV_CON_0005
W4	7000-40542-8030110	Canopen cable M12 M-F 90° 1.10m	MURR ELEKTRONIK	EP1	1	E_CAV_CON_0061

Name/Item	type/type	Descrizione/Description	Manufacturer/Marke	Quadro/Board	Q.ta/Q.ty	Internal code
X1	2429860000	AFS 4 2C BK Fuse terminal block, push in, 4 mm², 500 V, 6.3 A, black	Weidmuller	EP1	5	E_CQD_TER_0019
	1674300000	Double clamp ZDK 2.5/1.5	Weidmuller		28	E_CQD_TER_0010
	1689990000	ZDK 2.5/1.5V Dual Clamp	Weidmuller		46	E_CQD_TER_0011
	1690020000	Feed-through terminal with electrical components ZDK 2.5/1.5/D/1	Weidmuller		1	E_CQD_TER_0012
	9540000000	Fixing terminal for TS 35 ZEW 35 /6mm	Weidmuller		2	E_CQD_TER_0018
X1-G	1674300000	Double clamp ZDK 2.5/1.5	Weidmuller	EP1	1	E_CQD_TER_0010
	1689990000	ZDK 2.5/1.5V Dual Clamp	Weidmuller		4	E_CQD_TER_0011
	1061200000	Fixing terminal for TS 35 WEW 35/2	Weidmuller		2	E_CQD_TER_0017

Name/Item	type/type	Descrizione/Description	Manufacturer/Marke	Quadro/Board	Q.ta/Q.ty	Internal code
XP3	CSHM 16	Socket plug, 16 pin PE, connection with Squich spring clamp, 16A max, 500 V, 6kV, 3, with male contacts, silver-plated, size 77.27, Frutti Series Class Tecnica	Ilme	PB1	1	E_CON_MAS_0003
	CHV 16 L	Mobile enclosure with single lock with pegs, vertical outlet PG 21	Ilme		1	E_ACC_CON_0002

REV.	MODIFICA	DATA	FIRMA
01		28/04/26	

COMMESSA M2555C4

GENERAL ELECTRIC APPLIANCE

MORELLO GIOVANNI S.R.L.

DATA 28/04/2026
DOC.Nr. M2555C4_1
FILE M2555C4_REV3_ENG
DISEGN. R.G.
APPR.

DOCUMENTO SGAE VC P 50/2

DISTINTA MATERIALI
Bill of Materials

SCALA

Fogli Totali 51

Foglio 51

Foglio Seguente /