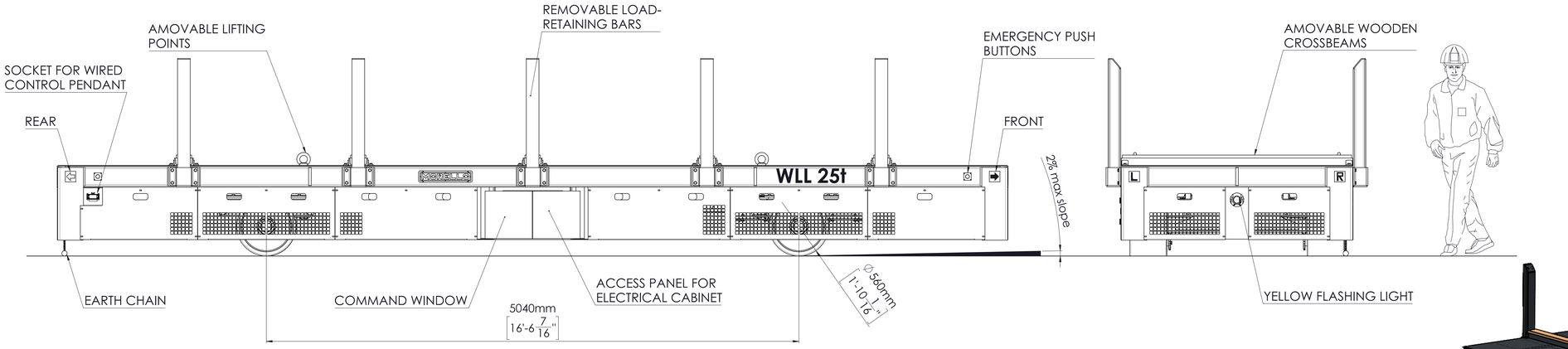

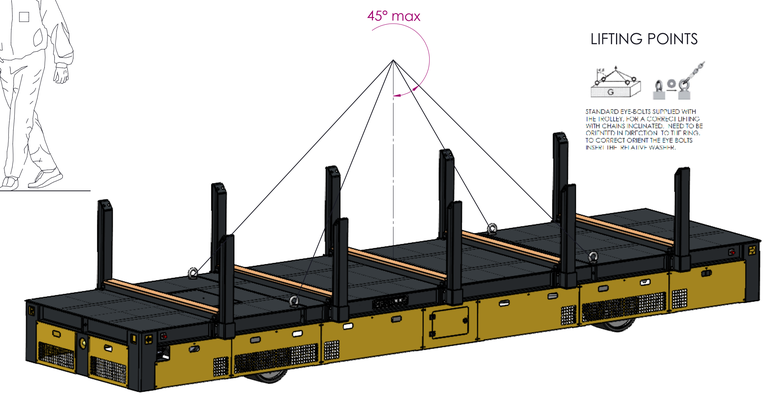

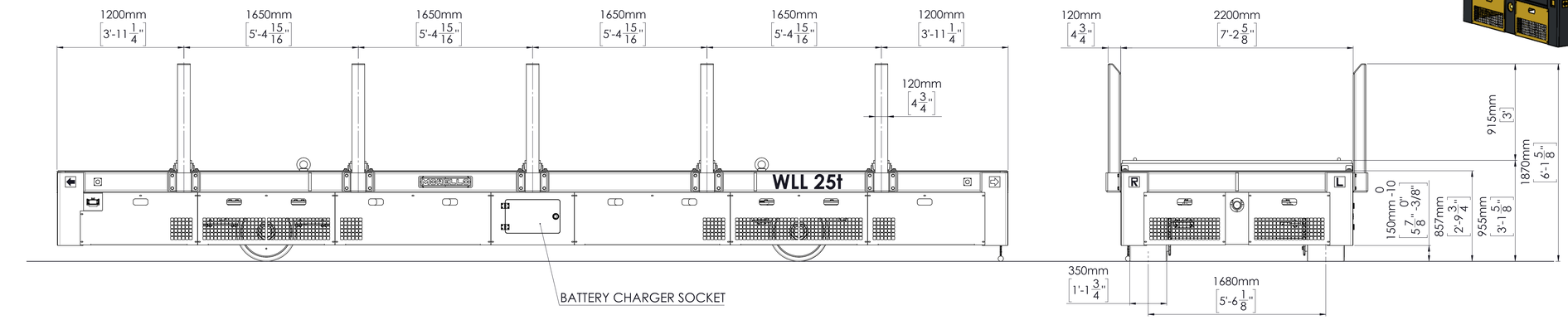

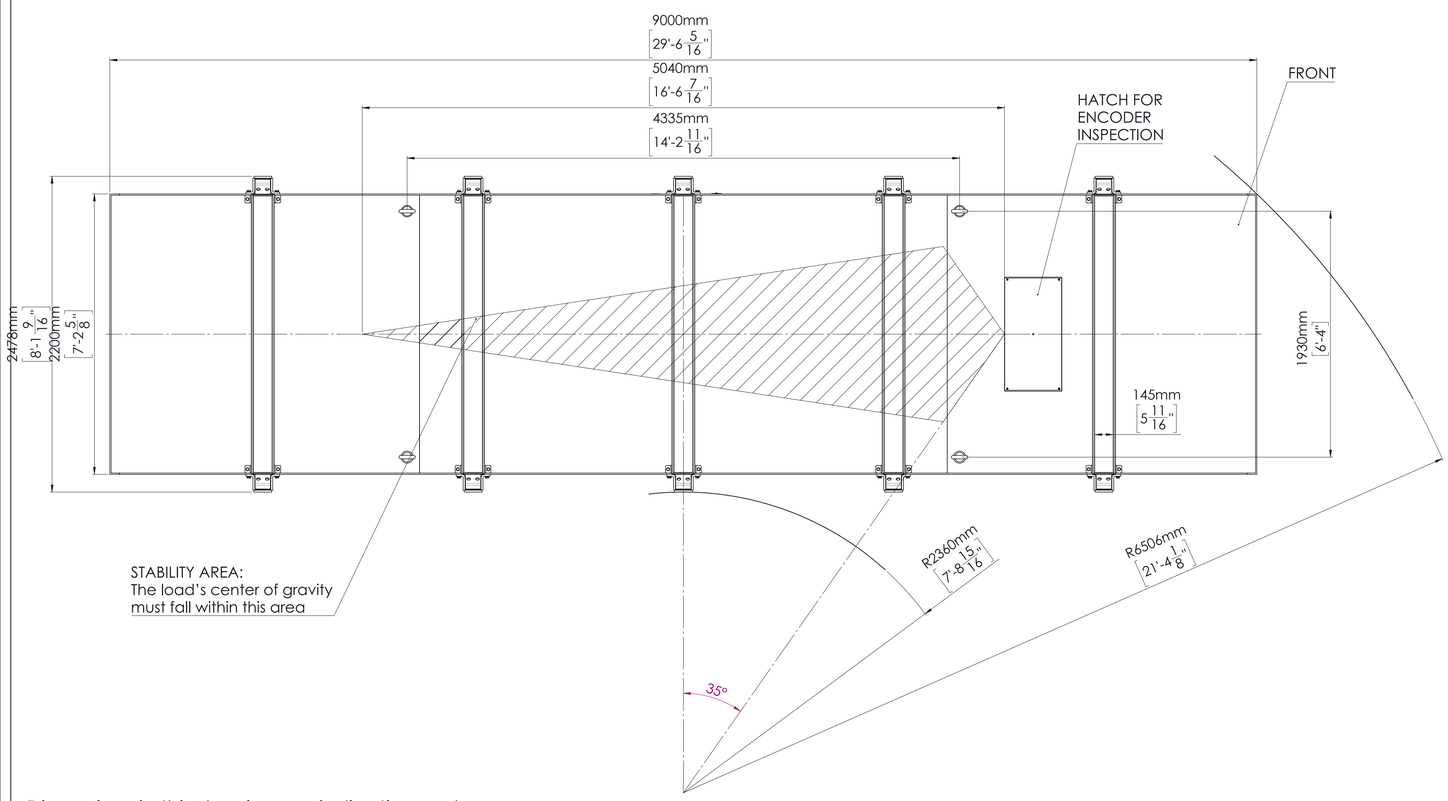

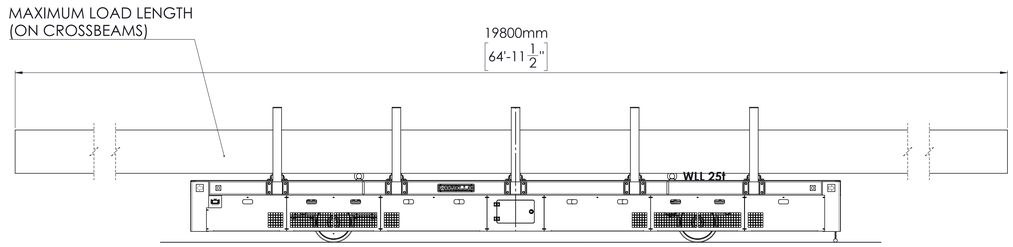

Dimensions in this drawing are indicative and may vary

CHARACTERISTICS

- LOADING DECK DIMENSIONS: 9.000x2.200 mm *[354,33x86,6 in]*
- LOADING DECK HEIGHT: 955 mm [37,6 in] *
- PAYLOAD: 25.000 kg [55,116 lb]
- LOAD TYPE: profiles, max. length 19,8 m [65 feet]
- MAX SPEED: 30 m/min on 0% slope
- MAX SLOPE: 2%
- DEAD LOAD: 6.300 kg [13,889 lb]
- PAINTING: yellow RAL1018 and gray RAL7016

(*) Measured on wooden crossbeams

MAIN MECHANICAL COMPONENTS

- N. 4 RUBBER WHEELS Ø560x350 mm [22x13,78 in]
- N. 4 AC MOTORS 80V 5.000W 2.200rpm
- N. 10 LOAD-RETAINING BARS
- N. 5 WOODEN CROSSBEAMS
- N. 4 LIFTING EYEBOLTS

MAIN ELECTRICAL COMPONENTS

- N. 1 LITHIUM BATTERY 80V 220Ah
- N. 1 BATTERY CHARGER 460V 60Hz 3ph
- N. 4 MULTICOLOR FLASHING LIGHT
- N. 4 EMERGENCY PUSH BUTTONS
- N. 1 REMOTE CONTROLLER
- N. 1 WIRED CONTROL PENDANT

MORELLO

MATERIAL HANDLING TECHNOLOGY SINCE 1946

L.go Dora Colletta 85/A
10153 Torino (Italy)
Tel. 011/2480569 - Fax 850085

e-mail: info@morellogiovanni.it
http:\\ www.morellogiovanni.it

PROJECT:

SGAE VC R 25/2

Payload: 25t

DESCRIPTION:

GENERAL ASSEMBLY DRAWING

CUSTOMER:		ORDER:	OFFER REFERENCE:
		2761	
DRW BY: D.Semilia	DATE: 05/01/2026	2762_A0A_AA000	
CHK BY:	SCALE: 1:17	ITEM NUMBER	

THIS DRAWING AND ITS DESIGN ARE THE PROPERTY OF MORELLO S.R.L. DUPLICATIONS WITHOUT PERMISSION ARE PROHIBITED

TOLERANCE: ±0,5 mm

FORMAT: A0